OPERATION MANUAL

MQ POWER®

WHISPERWATT™ SERIES

MODEL DCA400SSI4F3PB

60 Hz GENERATOR

(ISUZU BQ-6WG1X DIESEL ENGINE)

INSTRUCTION MANUAL NO. C3844303474

Revision #3 (04/29/25)

To find the latest revision of this publication or associated parts manual, visit our website at: www.mqpower.com

THIS MANUAL MUST ACCOMPANY THE EQUIPMENT AT ALL TIMES.

WARNING
CANCER &
REPRODUCTIVE HARM
www.P65Warnings.ca.gov
P/N 38707

DCA400SSI4F3PB 60 Hz Generator

Proposition 65 Warning 2
Table of Contents..... 3
Safety Decals 4
Safety Information 5–10
Specifications 11
Dimensions..... 12
Installation 13–14
General Information..... 15
General Paralleling Information..... 16–17
Major Components 18
Control and Operation Panel..... 19
Basler Digital Genset Controller 20–21
Output Terminal Panel Familiarization..... 22–24
Load Application 25
PowerBalance®..... 26
Generator Outputs..... 27
Output Terminal Panel Connections 28–30
Inspection/Setup..... 31–36
Generator Start-Up Procedure (Manual) 37–39
Generator Start-Up Procedure (Auto Mode)..... 40
Generator Shutdown Procedure..... 41
Generator Start-Up Procedure
(Parallel Operation) 42–45
Generator Shutdown Procedure
(Parallel Operation) 46
Maintenance..... 47–61
Troubleshooting (Diagnostics)..... 62–64
Troubleshooting (Generator) 65
Generator Wiring Diagram (C3814005823)..... 66
Engine Wiring Diagram (C3814106123)..... 67
Controller Wiring Diagram (A) (C3814105803) 68
Controller Wiring Diagram (B) (C3814105913) 69
MCB Sequence Diagram (C3814206303A) 70
Battery Charger Wiring Diagram (Option) 71
Engine Block Heater Wiring Diagram (Option)..... 72

NOTICE

Specifications are subject to change without notice.

SAFETY DECALS

Safety decals are attached to the generator as shown in Figure 1. Keep these safety decals clean at all times. When the safety decals become worn or damaged, contact your nearest dealer or the Multiquip Parts Department.

NOTICE

For safety decal part numbers, refer to the associated parts manual.

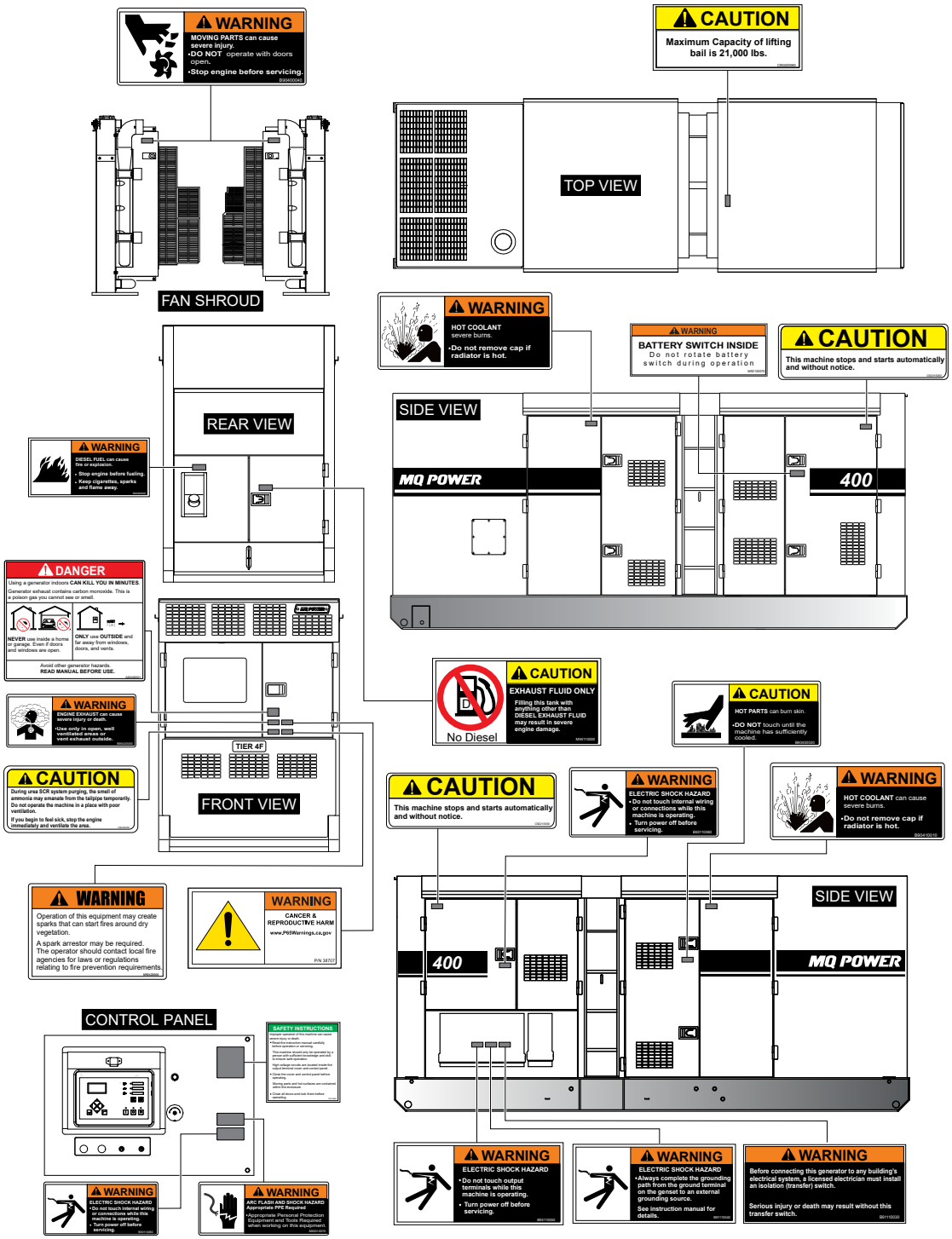

Figure 1. Safety Decals

Do not operate or service the generator before reading the entire manual. Safety precautions should be followed at all times when operating this generator. Failure to read and understand the safety messages and operating instructions could result in injury to yourself and others.

SAFETY MESSAGES

The four safety messages shown below will inform you about potential hazards that could injure you or others. The safety messages specifically address the level of exposure to the operator and are preceded by one of four words: **DANGER, WARNING, CAUTION** or **NOTICE.**

SAFETY SYMBOLS

DANGER

Indicates a hazardous situation which, if not avoided, **WILL** result in **DEATH** or **SERIOUS INJURY**.

WARNING

Indicates a hazardous situation which, if not avoided, **COULD** result in **DEATH** or **SERIOUS INJURY**.

CAUTION

Indicates a hazardous situation which, if not avoided, **COULD** result in **MINOR** or **MODERATE INJURY**.

NOTICE

Addresses practices not related to personal injury.

Potential hazards associated with the operation of this generator will be referenced with hazard symbols which may appear throughout this manual in conjunction with safety messages.

Symbol	Safety Hazard
	Lethal exhaust gas hazards
	Explosive fuel hazards
	Burn hazards
	Overspeed hazards
	Rotating parts hazards
	Pressurized fluid hazards
	Electric shock hazards

GENERAL SAFETY

CAUTION

- **NEVER** operate this generator without proper protective clothing, shatterproof glasses, respiratory protection, hearing protection, steel-toed boots and other protective devices required by the job or city and state regulations.

- **NEVER** operate this generator when not feeling well due to fatigue or illness, or when on medication.

- **NEVER** operate this generator under the influence of drugs or alcohol.

- **ALWAYS** check the generator for loosened threads or bolts before starting.
- **NEVER** use the generator for any purpose other than its intended purposes or applications.

NOTICE

- This generator should only be operated by trained and qualified personnel 18 years of age and older.
- Whenever necessary, replace nameplate, operation and safety decals when they become difficult to read.
- Manufacturer does not assume responsibility for any accident due to equipment modifications. Unauthorized modification of the generator will void all warranties.
- **NEVER** use accessories or attachments that are not recommended by MQ Power for this generator. Damage to the generator and/or injury to the user may result.
- **ALWAYS** know the location of the nearest **fire extinguisher.**

- **ALWAYS** know the location of the nearest **first aid kit.**

- **ALWAYS** know the location of the nearest phone or **keep a phone on the job site.** Also, know the phone numbers of the nearest **ambulance, doctor,** and **fire department.** This information will be invaluable in the case of an emergency.

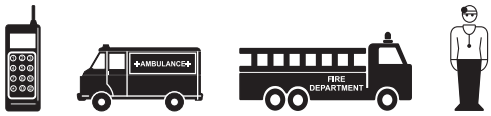

GENERATOR SAFETY

DANGER

- **NEVER** operate the generator in an explosive atmosphere or near combustible materials. An explosion or fire could result causing **severe bodily harm or even death**.

WARNING

- **NEVER** disconnect any **emergency or safety devices**. These devices are intended for operator safety. Disconnection of these devices can cause **severe injury, bodily harm or even death**. Disconnection of any of these devices will void all warranties.

CAUTION

- **NEVER** lubricate components or attempt service on a **running** generator.

NOTICE

- **ALWAYS** ensure the generator is on level ground before use.
- **ALWAYS** keep the generator in proper running condition.
- Fix damage to the generator and replace any broken parts immediately.
- **ALWAYS** store the generator properly when it is not being used. The generator should be stored in a clean, dry location out of the reach of children and unauthorized personnel.

ENGINE SAFETY

DANGER

- The engine fuel exhaust gases contain poisonous carbon monoxide. This gas is colorless and odorless, and can cause **death** if inhaled.
- The engine of this generator requires an adequate, free flow of cooling air. **NEVER** operate this equipment in any enclosed or narrow area where free flow of the air is restricted. If the air flow is restricted it will cause injury to people and property and serious damage to the equipment or engine.

- When operating the generator outdoors, **DO NOT** place the generator near doors, windows or vents that could allow carbon monoxide to enter and build up in occupied spaces.

WARNING

- **NEVER** place hands or fingers inside the engine compartment when the engine is running.
- **NEVER** operate the engine with heat shields or guards removed.
- Keep fingers, hands, hair and clothing away from all moving parts to prevent injury.

- **NEVER** operate the generator with the doors open. Stop the engine before servicing.
- **DO NOT** remove the radiator cap while the engine is hot. High pressure boiling water will gush out of the radiator and severely scald any persons in the general area of the generator.

- **DO NOT** remove the coolant drain plug while the engine is hot. Hot coolant will gush out of the coolant tank and severely scald any persons in the general area of the generator.
- **DO NOT** drain the engine oil while the engine is hot. Hot oil will gush out and severely scald any persons near the generator.
- Operation of the generator may create sparks that can start fires around dry vegetation. A spark arrestor may be required. The operator should contact local fire agencies for laws or regulations relating to fire prevention requirements.

CAUTION

- **NEVER** touch the hot exhaust manifold, muffler or cylinder. Allow these parts to cool before servicing the generator.

NOTICE

- **NEVER** run the engine without an air filter or with a dirty air filter. Severe engine damage may occur. Service the air filter frequently to prevent engine malfunction.
- **NEVER** tamper with the factory settings of the engine or engine governor. Damage to the engine or generator can result if operating in speed ranges above the maximum allowable.

- Wet stacking is a common problem with diesel engines which are operated for extended periods with light or no load applied. When a diesel engine operates without sufficient load (less than 30-35% of the rated output), it will not operate at its optimum temperature. This will allow unburned fuel to accumulate in the exhaust system, which can foul the fuel injectors, engine valves and exhaust system, including turbochargers, and reduce the operating performance.

  In order for a diesel engine to operate at peak efficiency, it must be able to provide fuel and air in the proper ratio and at a high enough engine temperature for the engine to completely burn all of the fuel.

  Wet stacking does not usually cause any permanent damage and can be alleviated if additional load is applied to relieve the condition. It can reduce the system performance and increase maintenance. Applying an increasing load over a period of time until the excess fuel is burned off and the system capacity is reached usually can repair the condition. This can take several hours to burn off the accumulated unburned fuel.

FUEL SAFETY

⚠ DANGER

- **NEVER** start the engine near spilled fuel or combustible fluids. Diesel fuel is extremely flammable and its vapors can cause an explosion if ignited.
- **ALWAYS** refuel in a well-ventilated area, away from sparks and open flames.
- **ALWAYS** use extreme caution when working with **flammable** liquids.
- **NEVER** fill the fuel tank while the engine is **running** or **hot**.
- **NEVER** overfill the fuel tank. Spilled fuel can ignite if it comes into contact with hot engine parts or sparks from the ignition system.
- Store fuel in appropriate containers, in well-ventilated areas and away from sparks and flames.
- **NEVER** use fuel as a cleaning agent.
- **NEVER** smoke around or near the equipment. Fire or explosion could result from fuel vapors or if fuel is spilled on a hot engine.

TOWING SAFETY

⚠ CAUTION

- Check with your local county or state safety towing regulations, in addition to meeting ***Department of Transportation (DOT) Safety Towing Regulations***, before towing your generator.

- Refer to the MQ Power trailer manual for additional safety information.
- In order to reduce the possibility of an accident while transporting the generator on public roads, **ALWAYS** make sure that the trailer that supports the generator and the towing vehicle are both mechanically sound and in good operating condition.
- **ALWAYS** shut down the engine before transporting.
- Make sure the hitch and coupling of the towing vehicle are rated equal to or greater than the trailer **gross vehicle weight rating**.
- **ALWAYS** inspect the hitch and coupling for wear. **NEVER** tow a trailer with defective hitches, couplings, chains, etc.
- Check the tire air pressure on both the towing vehicle and the trailer. ***Inflate trailer tires as indicated on side wall of tire.*** Also check the tire tread wear on both vehicles.
- **ALWAYS** make sure the trailer is equipped with **safety chains**.
- **ALWAYS** properly attach the trailer's safety chains to the towing vehicle.
- **ALWAYS** make sure the vehicle and trailer directional, backup, brake, and trailer lights are connected and working properly.
- DOT requirements include the following:
  - Connect and test electric brake operation.
  - Secure portable power cables in cable tray with tie wraps.
- The maximum speed for highway towing is **55 MPH** unless posted otherwise. Recommended off-road towing is not to exceed **15 MPH** or less depending on the type of terrain.
- Avoid sudden stops and starts. These can cause skidding or jackknifing. Smooth, gradual starts and stops will improve towing.
- Avoid sharp turns to prevent rolling.
- The trailer should be adjusted to a level position at all times when towing.
- Raise and lock the trailer wheel stand in the upright position when towing.
- Place ***chock blocks*** underneath the wheels to prevent **rolling** while parked.
- Place **support blocks** underneath the trailer's bumper to prevent **tipping** while parked.
- Use the trailer's swivel jack to adjust the trailer height to a level position while parked.

ELECTRICAL SAFETY

DANGER

- **NEVER** touch the output terminals during operation. Contact with the output terminals during operation can cause **electrocution, electrical shock, or burn**.

- The electrical voltage required to operate the generator can cause **severe injury or even death** through physical contact with live circuits. Turn the generator and all circuit breakers **OFF** before performing maintenance on the generator or making contact with the output terminals.
- **NEVER** insert any objects into the output receptacles during operation. This is extremely dangerous. The possibility exists of **electrical shock, electrocution or death**.

- Backfeed to a utility system can cause **electrocution** and/or property damage. **NEVER** connect the generator to a building's electrical system without a transfer switch or other approved device. All installations should be performed by a **licensed electrician** in accordance with all applicable laws and electrical codes. Failure to do so could result in electrical shock or burn, causing **serious injury or even death**.

Power Cord/Cable Safety

DANGER

- **NEVER** let power cords or cables **lay in water**.
- **NEVER stand in water** while AC power from the generator is being transferred to a load.
- **NEVER** use **damaged** or **worn** cables or cords when connecting equipment to the generator. Inspect the insulation for cuts.
- **NEVER** grab or touch a live power cord or cable with wet hands. The possibility exists of **electrical shock, electrocution or death**.

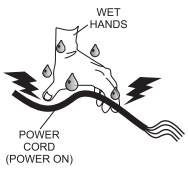

- Make sure power cables are securely connected to the generator's output receptacles. Incorrect connections may cause electrical shock and damage to the generator.

NOTICE

- **ALWAYS** make certain that the proper power or extension cord has been selected for the job. See the Cable Selection Chart in this manual.

Grounding Safety

DANGER

- **ALWAYS** make sure that electrical circuits are properly grounded to a suitable earth ground (ground rod) per the National Electrical Code (NEC) and local codes before operating the generator. **Severe injury or death by electrocution** can result from operating an ungrounded generator.
- **NEVER** use gas piping as an electrical ground.

BATTERY SAFETY

DANGER

- **DO NOT** drop the battery. There is a possibility that the battery will explode.
- **NEVER** expose the battery to open flames, sparks, cigarettes, etc. The battery contains combustible gases and liquids. If these gases and liquids come into contact with a flame or spark, an explosion could occur.

WARNING

- **ALWAYS** wear safety glasses when handling the battery to avoid eye irritation. The battery contains acids that can cause injury to the eyes and skin.

- Use well-insulated gloves when picking up the battery.
- **ALWAYS** keep the battery charged. If the battery is not charged, combustible gas will build up.
- **ALWAYS** recharge the battery in a well-ventilated environment to avoid the risk of a dangerous concentration of combustible gases.
- If the battery liquid (dilute sulfuric acid) comes into contact with **clothing or skin**, rinse skin or clothing immediately with plenty of water.

- If the battery liquid (dilute sulfuric acid) comes into contact with **eyes**, rinse eyes immediately with plenty of water and contact the nearest doctor or hospital to seek medical attention.

⚠ CAUTION

- **ALWAYS** disconnect the **NEGATIVE battery terminal** before performing service on the generator.
- **ALWAYS** keep battery cables in good working condition. Repair or replace all worn cables.

ENVIRONMENTAL SAFETY/DECOMMISSIONING

NOTICE

Decommissioning is a controlled process used to safely retire a piece of equipment that is no longer serviceable. If the equipment poses an unacceptable and unrepairable safety risk due to wear or damage or is no longer cost effective to maintain (beyond life-cycle reliability) and is to be decommissioned (demolition and dismantlement), be sure to follow the rules below:

- **NEVER** pour waste or oil directly onto the ground, down a drain, or into any water source.
- Contact your country's Department of Public Works or recycling agency in your area and arrange for proper disposal of any electrical components, waste or oil associated with this equipment.

- When the life cycle of this equipment is over, remove the battery and bring it to an appropriate facility for lead reclamation. Use safety precautions when handling batteries that contain sulfuric acid.
- When the life cycle of this equipment is over, it is recommended that the frame and all other metal parts be sent to a recycling center.

  Metal recycling involves the collection of metal from discarded products and its transformation into raw materials to use in manufacturing a new product.

  Recyclers and manufacturers alike promote the process of recycling metal. Using a metal recycling center promotes energy cost savings.

EMISSIONS INFORMATION

NOTICE

The diesel engine used in this equipment has been designed to reduce harmful levels of carbon monoxide (CO), hydrocarbons (HC), and nitrogen oxides (NOx) contained in diesel exhaust emissions.

This engine has been certified to meet US EPA evaporative emissions requirements in the installed configuration.

Attempting to modify or make adjustments to the engine emission system by unauthorized personnel without proper training could damage the equipment or create an unsafe condition.

Additionally, modifying the fuel system may adversely affect evaporative emissions, resulting in fines or other penalties.

Emission Control Label

The emission control label is an integral part of the emission system and is strictly controlled by regulations.

The label must remain with the engine for its entire life.

If a replacement emission label is needed, please contact your authorized engine distributor.

Table 1. Generator Specifications		
Models	DCA400SSI4F3PB	
Type	Revolving field, self-ventilated, open protected type synchronous generator	
Armature Connection	**Star with Neutral**	
Phase	3	
Standby Output	336 kW (420 kVA)	
Prime Output	320 kW (400 kVA)	
3Ø Voltage	208, 220, 240, 416, 440, 480V	
1Ø Voltage	120, 127, 139, 240, 254, 277V	
Voltage Change-Over Board Tie Bolt Torque	554.9 lbf·in (62.7 N·m)	
Power Factor	0.8	
Frequency	60 Hz	
Speed	1,800 rpm	
Aux. AC Power	Single phase, 60 Hz	
Pitch	2/3	
Subtransient	0.087	
Transient	0.227	
Synchronous	1.733	
Zero Sequence Reactance	0.0087	
Overload Protection	OCR / main circuit breaker	
Aux. Voltage/Output	120V / 4.8 kW (2.4 kW × 2)	
Dry Weight	12,280 lb. (5,570 kg)	
Wet Weight	13,184 lb. (5,980 kg)	
Table 2. Engine Specifications		
Model	ISUZU BQ-6WG1X Tier 4 Final Certified	
Type	4-cycle, water-cooled, direct injection, turbocharged, charged air-cooled, EGR, DOC, and SCR	
No. of Cylinders	6	
Bore × Stroke	5.79 in. × 6.06 in. (147 mm × 154 mm)	
Displacement	957 cu. in. (15.68 liters)	
Rated Output	458 hp at 1,800 rpm	
Starting	Electric	
Coolant Capacity	19.4 gal. (73.6 liters)[1]	
Lube Oil Capacity	15.1 gal. (57 liters)[2]	
Lube Oil Type	API service class CJ-4	
DEF Tank Capacity	14.8 gal. (56 liters)	
Fuel Tank Capacity	55.5 gal. (210 liters)	
Fuel Type	No. 2 diesel fuel (ultra-low sulfur diesel fuel only)	
Fuel Consumption	27.6 gal. (104.6 L)/hr. at **full load**	20.4 gal. (77.0 L)/hr. at **3/4 load**
	13.4 gal. (50.8 L)/hr. at **1/2 load**	8.4 gal. (31.6 L)/hr. at **1/4 load**
Battery	12V 200Ah × 2 (24 VDC system)	

[1] Includes engine and radiator hoses

[2] Includes filters

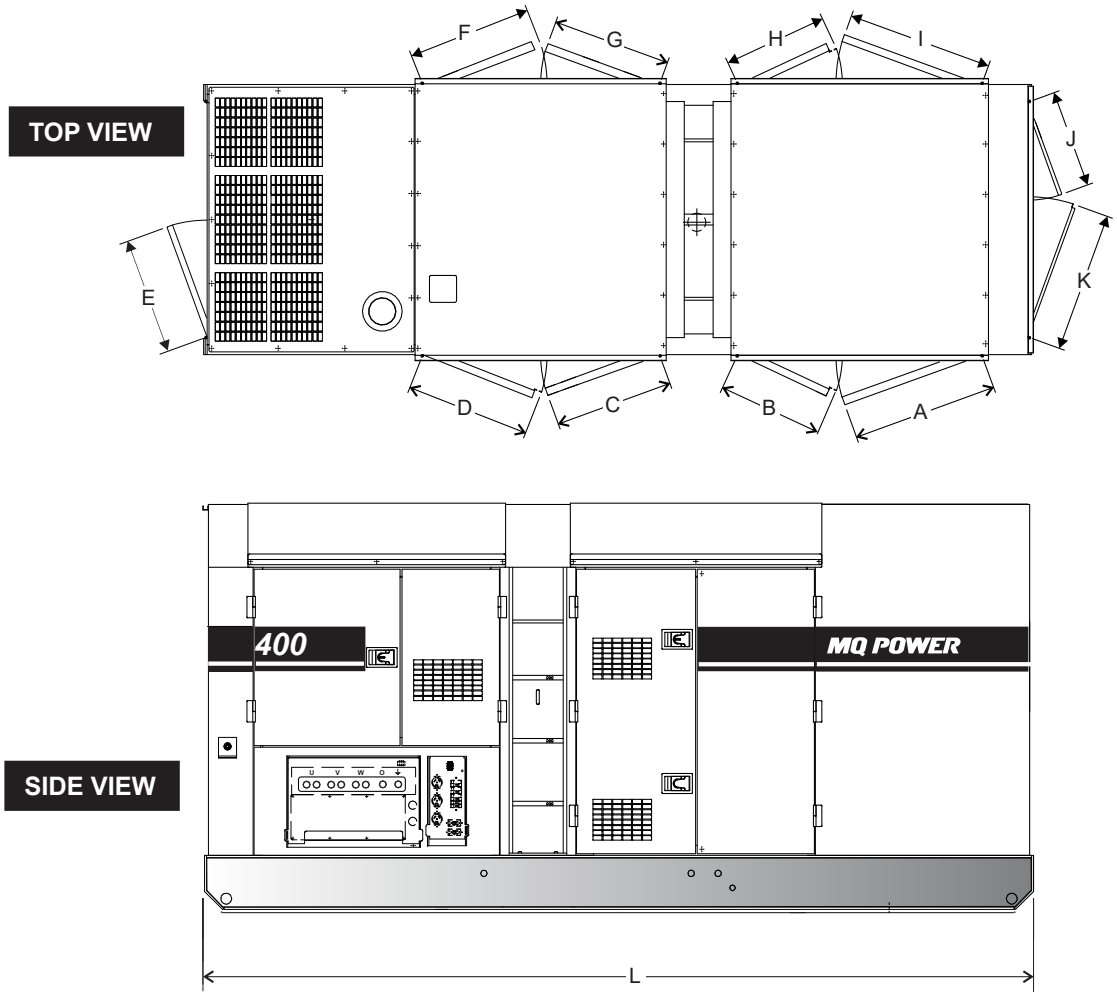

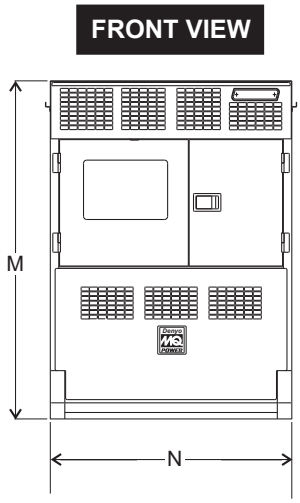

Figure 2. Dimensions

Table 3. Dimensions			
Reference Letter	Dimension in. (mm)	Reference Letter	Dimension in. (mm)
A	31.89 (810)	H	22.83 (580)
B	22.83 (580)	I	31.89 (810)
C	26.00 (660)	J	21.46 (545)
D	27.16 (690)	K	30.71 (780)
E	25.59 (650)	L	181.10 (4,600)
F	27.16 (690)	M	88.58 (2,250)
G	26.00 (660)	N	59.06 (1,500)

GENERATOR GROUNDING

ALWAYS refer to Article 250 (Grounding and Bonding) of the National Electrical Code (NEC).

> ***NOTICE***
>
> **ALWAYS** check with state, province, district, and municipalities for electrical grounding requirements before using the generator.

EXAMPLE of how to ground the unit (Figure 3) if the condition of use requires such a device:

Connecting The Ground

Consult with local electrical and safety codes for proper connection based on condition of use. Refer to the Conductor Grounding Table, Article 250 of the NEC handbook.

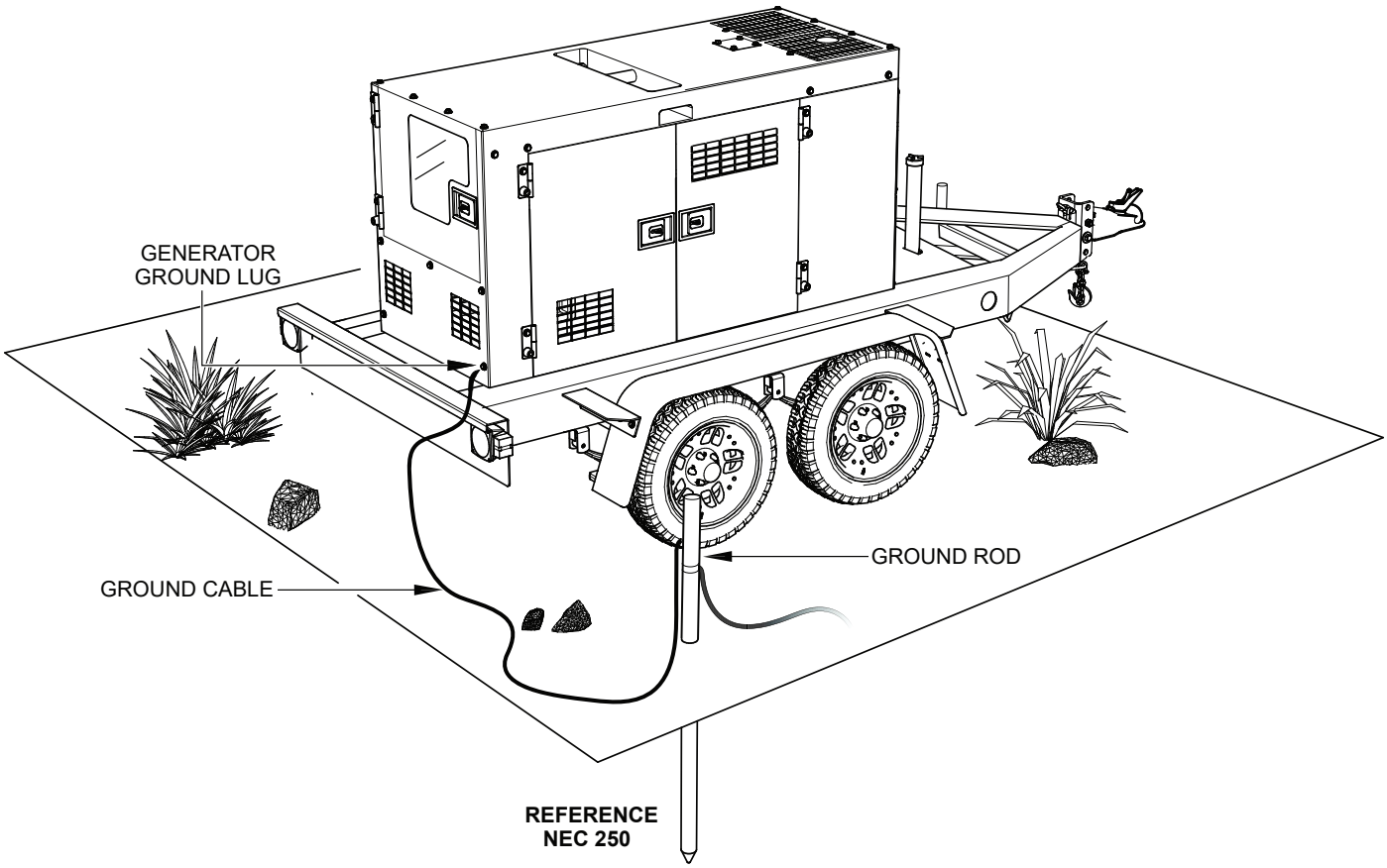

Figure 3. Typical Generator Grounding Application

> ***NOTICE***
>
> Trailer-mounted generators are the sole responsibility of MQ Power.

OUTDOOR INSTALLATION

Install the generator in an area that is free of debris, bystanders, and overhead obstructions. Make sure the generator is on secure, level ground so that it cannot slide or shift around. Also, install the generator in a manner so that the exhaust will not be discharged in the direction of nearby homes.

The installation site must be relatively free from moisture and dust. All electrical equipment should be protected from excessive moisture. Failure to do so will result in deterioration of the insulation and will result in short circuits and grounding.

Foreign materials such as dust, sand, lint, and abrasive materials have a tendency to cause excessive wear to engine and alternator parts.

⚠ CAUTION

Pay close attention to ventilation when operating the generator inside tunnels and caves. The engine exhaust contains noxious elements. Engine exhaust must be routed to a ventilated area.

INDOOR INSTALLATION

Exhaust gases from diesel engines are extremely poisonous. Whenever an engine is installed indoors the exhaust fumes must be vented to the outside. The engine should be installed at least two feet from any outside wall. Using an exhaust pipe which is too long or too small can cause excessive back pressure which will cause the engine to heat excessively and possibly burn the valves.

MOUNTING

The generator must be mounted on a solid foundation (such as concrete) and set firmly on the foundation to isolate vibration of the generator when it is running. The generator must be mounted at least 6 inches above the floor or grade level as referenced in the National Fire Protection Association handbook (NFPA 110, Chapter 7, Section 7.4).

DO NOT remove the metal skids on the bottom of the generator. They are to resist damage to the bottom of the generator and to maintain alignment.

GENERATOR

This generator (Figure 4) is designed as a high-quality, portable (requiring a trailer for transport) power source for telecom sites, lighting facilities, power tools, submersible pumps and other industrial and construction machinery.

CONTROL AND OPERATION PANEL

The **control and operation panel** is provided with the following:

- Basler DGC2020HD Digital Controller (Standard)
  - Liquid Crystal Display
  - Not In Auto Indicator
  - Alarm Indicator
  - Supplying Load Indicator
  - Alarm Silence Button
  - Lamp Test Button
  - Auto Button/Mode Indicator
  - Off Button/Mode Indicator
  - Run Button/Mode Indicator
  - Reset Button
  - Arrow Buttons (4)
  - Edit Button
  - Select Voltage Indicator Lamps (3)
- Circuit Breaker On Button
- Circuit Breaker Off Button
- Panel Light/Panel Light Switch
- Control Power Switch
- Pilot Lamp
- Voltage Regulator
- Battery Switch
- 3-Phase, 1000-Amp Main Circuit Breaker
- **Control Box** (located behind control panel)
  - Automatic Voltage Regulator
  - Current Transformer
  - Overcurrent Relay
  - Starter Relay
  - Voltage Change-Over Board

OUTPUT TERMINAL PANEL

The **output terminal panel** is provided with the following:

- Three 240/139V Output Receptacles (CS-6369), 50A
- Three Auxiliary Circuit Breakers, 50A
- Two 120V Output Receptacles (GFCI), 20A
- Two GFCI Circuit Breakers, 20A
- Eight Output Terminal Lugs (3Ø Power)
- Ground Lug
- Cam-Lok Connectors (Option)
- Battery Charger (Option)
- Engine Block Heater (Option)

OPEN-DELTA EXCITATION SYSTEM

Each generator is equipped with a state-of-the-art, **open-delta** excitation system. The open-delta system consists of an electrically independent winding wound among stationary windings of the AC output section.

There are four connections of the open delta—A, B, C, and D. During steady state loads, the power from the voltage regulator is supplied from the parallel connections of A to B, A to D, and C to D. These three phases of the voltage input to the voltage regulator are then rectified and are the excitation current for the exciter section.

When a heavy load such as a motor starting or a short circuit occurs, the automatic voltage regulator (AVR) switches the configuration of the open delta to the series connection of B to C. This has the effect of adding the voltages of each phase to provide higher excitation to the exciter section and thus better voltage response during the application of heavy loads.

The connections of the AVR to the AC output windings are for sensing only. No power is required from these windings.

The open-delta design provides virtually unlimited excitation current, offering maximum motor-starting capabilities. The excitation does not have a 'fixed ceiling' and responds according the demands of the required load.

ENGINE

This generator is powered by a 4-cycle, water-cooled, direct-injection, turbocharged, charged air-cooled, Isuzu BQ-6WG1X diesel engine. This engine is designed to meet every performance requirement for the generator. Refer to Table 2 for engine specifications.

In keeping with MQ Power's policy of constantly improving its products, the specifications quoted herein are subject to change without prior notice.

MICROPROCESSOR CONTROL SYSTEM

The microprocessor controls the RPM of the engine. When the engine demand increases or decreases, the microprocessor system regulates the frequency variation to ± 0.25%.

EXTENSION CABLES

When electric power is to be provided to various tools or loads at some distance from the generator, extension cords are normally used. Cables should be sized to allow for distance in length and amperage so that the voltage drop between the generator and point of use (load) is held to a minimum. Use the cable selection chart (Table 6) as a guide for selecting the proper extension cable size.

PARALLELING

Paralleling is the sharing of a load between two generator sets or more.

LOAD SHARING

Load sharing is defined as the proportional division of the **kW** and **kVAR** total load between multiple generator sets in a paralleled system.

Load sharing is essential to avoid overloading and stability problems on the system's generator sets.

ACTIVE POWER (KW) LOAD SHARING

When generator sets operate in parallel, the engine speed governor of each generator set determines the proportional sharing of the total active power requirements (kW) of the system.

The kW load sharing is achieved by increasing or decreasing fuel to the system's engines. As the fuel to the engine of one generator set in a group is increased it will not lead to an increase in speed and hence frequency (as it would if it were operating alone) but it will lead to an increase in the proportion of the total kW load that it will deliver.

As the fuel to the engine of one generator set in a group is decreased it will not lead to a decrease in speed and hence frequency (as it would if it were operating alone) but it will lead to a decrease in the proportion of the total kW load that it will deliver.

The control system of the generator sets (via the engine speed control system) monitors and controls the sharing of the total kW load in proportion to the relative rating of the engines on the system's generator sets.

REACTIVE POWER (KVAR) LOAD SHARING

When generator sets operate in parallel the alternator field excitation system of each generator set controls the proportional sharing of the total reactive power requirements (kVAR) of the system.

The kVAR load sharing is achieved by increasing or decreasing the field excitation to the system's alternators.

As the field excitation of one generator set in a group is increased (i.e. over excited) it will not lead to an increase in voltage (as it would if it were operating alone) but it will lead to an increase in the proportion of the total kVAR load it will deliver and a decrease in its power factor.

As the field excitation of one generator set in a group is decreased (i.e. over excited) it will not lead to a decrease in voltage (as it would if it were operating alone) but it will lead to a decrease in the proportion of the total kVAR load it will deliver and an increase in its power factor.

An undesirable circulating reactive current (cross current) will flow in the system if the excitation of the alternators is not matched.

LOAD MANAGEMENT

These generators are set up to automatically manage load based on demand. Load management is only functional in **Auto mode**. While in Auto mode, if the auto-start contacts are closed, load management is active by default. Load management will only run the number of units needed to support the load.

If the load demand is small, only one generator will remain running while the other generators will remain in standby mode. If the load increases above 80% of its capacity, it will start the next generator. The next generator priority is based on the time remaining on the maintenance timer.

Generators with more time until scheduled maintenance will take priority over units that are almost due for maintenance. Once the second unit starts, it will synchronize and parallel in, then ramp up to share the load. If the load levels drop below 35% of its combined rating, the generator that is no longer needed will ramp off, shut down, and wait in standby mode.

SEQUENCING

NOTICE

Ethernet communication is required when the generators are configured for the sequencing mode of operation.

These generators are capable of sequencing for control of balanced maintenance schedules. As described above, these generators can start and stop as demand raises or lowers. In addition, if a unit gets to the point of maintenance, it will ramp off and start the next generator to relieve it based on the time remaining on the maintenance timer.

After maintenance is performed, the maintenance timers should be reset to the recommended service interval. This is usually 250 hours depending on the engine oil type.

MAINTENANCE INTERVAL

Maintenance intervals are factory set for 250 hours. The maintenance interval timer will count down to zero indicating that it is time for the unit to be serviced.

Once the timer counts down to zero, a pre-alarm will appear indicating that the unit is due for maintenance. To reset the maintenance interval back to the default time of 250 hours, press and hold the **Reset button** for 10 seconds.

To reset the maintenance interval using the Reset button, the **Maintenance Due pre-alarm** must be active, and the Basler controller must display the **Overview (main) screen**.

If the maintenance timer has not yet expired and it is desired to reset the unit back to 250 hours, navigate back to the **Settings menu**: Settings Menu->System Parameters->Engine Statistics->Hours To Maintenance.

ALARM SILENCE

Pre-Alarm Silence allows the user to suppress the toggling of the alarm screen when a new pre-alarm becomes active. While a pre-alarm is active, pressing the **Alarm Silence button** will suppress the fault display.

This is a very useful function when the **Maintenance Interval pre-alarm** occurs. Right after the pre-alarm occurs, it will begin toggling between the pre-alarm and the **Overview screen**.

While in this mode, pressing the Reset button does not reset the maintenance interval. In order to reset the maintenance interval, the Overview screen must be selected.

Pressing the Alarm Silence button will stop the toggling between the pre-alarm and the Overview screen.

Once the Overview screen is selected, the maintenance interval can be reset by pressing and holding the Reset button for 10 seconds.

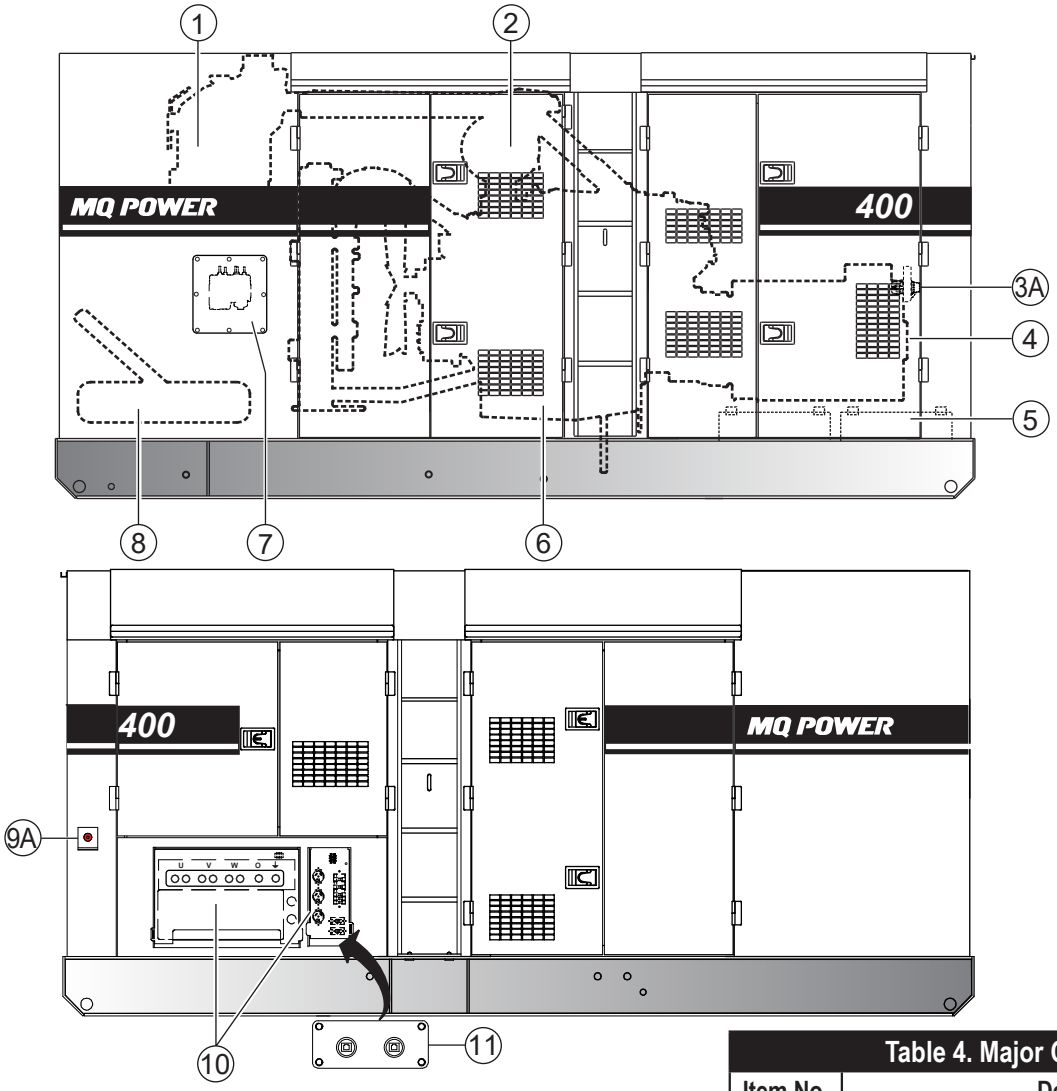

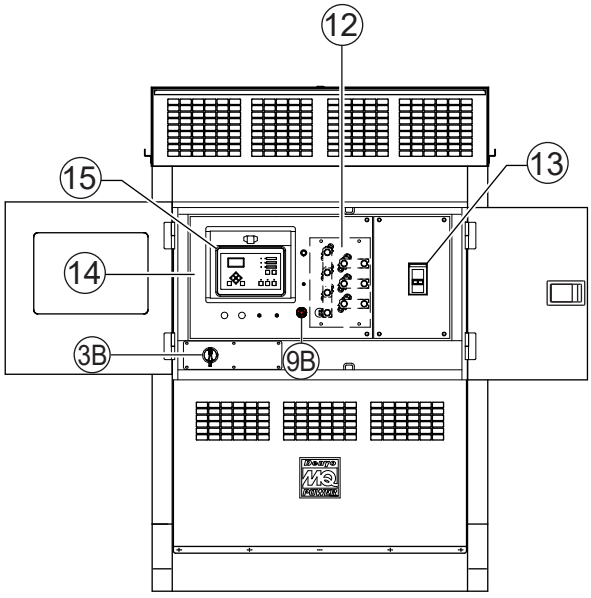

Figure 4. Major Components

Table 4. Major Components	
Item No.	**Description**
1	Muffler Assembly
2	Air Cleaner Assembly
3A	Battery Switch (S/N 3979262 and Above)
3B	Battery Switch (S/N 3979261 and Below)
4	Generator Assembly
5	Battery Assembly
6	Engine Assembly
7	DEF Supply Module Assembly
8	Fuel Tank Assembly
9A	Emergency Stop Switch (S/N 3954565 and Above)
9B	Emergency Stop Switch (S/N 3954564 and Below)
10	Output Terminal Panel Assembly
11	Parallel Communication Receptacles
12	Voltage Change-Over Board Assembly
13	Circuit Breaker Assembly
14	Control and Operation Panel Assembly
15	Basler Digital Controller Assembly

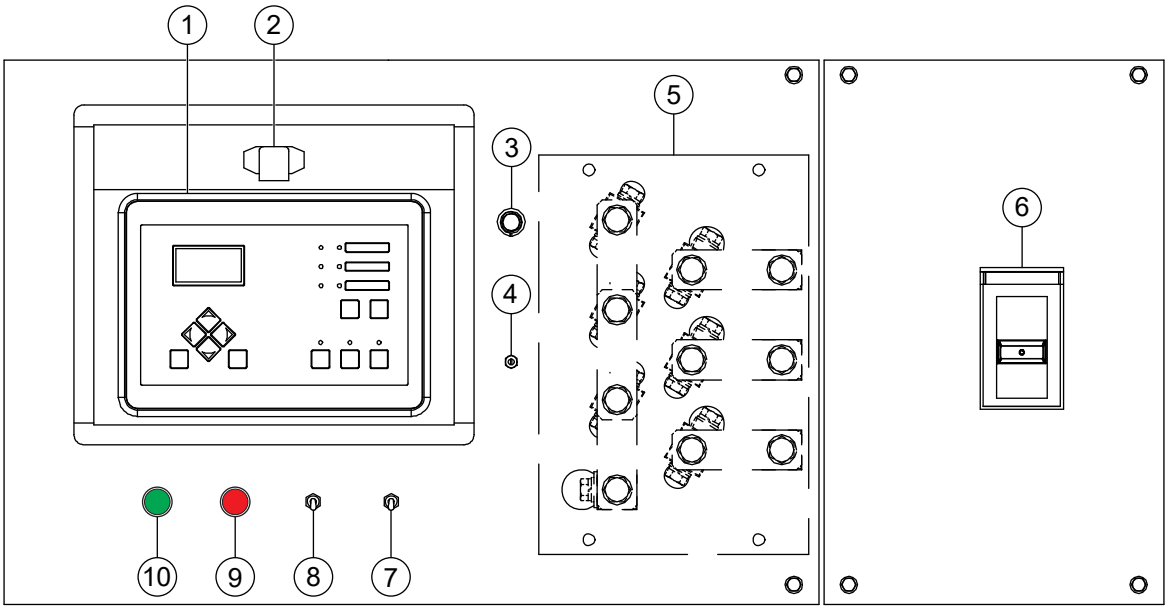

Figure 5. Engine/Generator Control Panel

The definitions below describe the controls and functions of the **control and operation panel** (Figure 5).

1. **Basler DGC-2020HD Digital Genset Controller** — Displays parameters (AC voltage, AC current, phase, frequency, fuel level, DEF level, oil pressure, engine run hours, water/coolant temperature, and battery voltage) as well as diagnostic trouble codes and messages. Refer to the ***Basler Digital Genset Controller*** section for more information.
2. **Panel Light** — Illuminates the control panel for operation in the dark.
3. **Pilot Lamp** — Turns on during engine operation.
4. **Voltage Regulator Control Knob** — Allows fine manual adjustment of the generator's output voltage.
5. **Voltage Change-Over Board** — Consists of 6 jumper plates that allow the generator to be configured for either 240 or 480 VAC output. Located inside the control box.
6. **Main Circuit Breaker** — This 3-phase, 1000-amp, main circuit breaker connects or disconnects the generator output to or from the output terminals, and protects the unit from short circuits or overcurrent. Located inside the control box.
7. **Control Power Switch** — Set this switch to the **ON** position prior to operation. The digital controller will turn **ON**. Make sure the switch is set to the **OFF** position when operation has ended. This switch is disabled while the engine is running.
8. **Panel Light Switch** — Turns the panel light on/off. Make sure the panel light switch is in the **OFF** position when the panel light is not needed.
9. **Circuit Breaker OFF Button** — Press this button during manual operation to turn the main circuit breaker **OFF**. The button LED will turn on **(red)** to indicate that the circuit breaker is **open**.
10. **Circuit Breaker ON Button** — Press this button during manual operation to turn the main circuit breaker **ON**. The button LED will turn on **(green)** to indicate that the circuit breaker is **closed**.

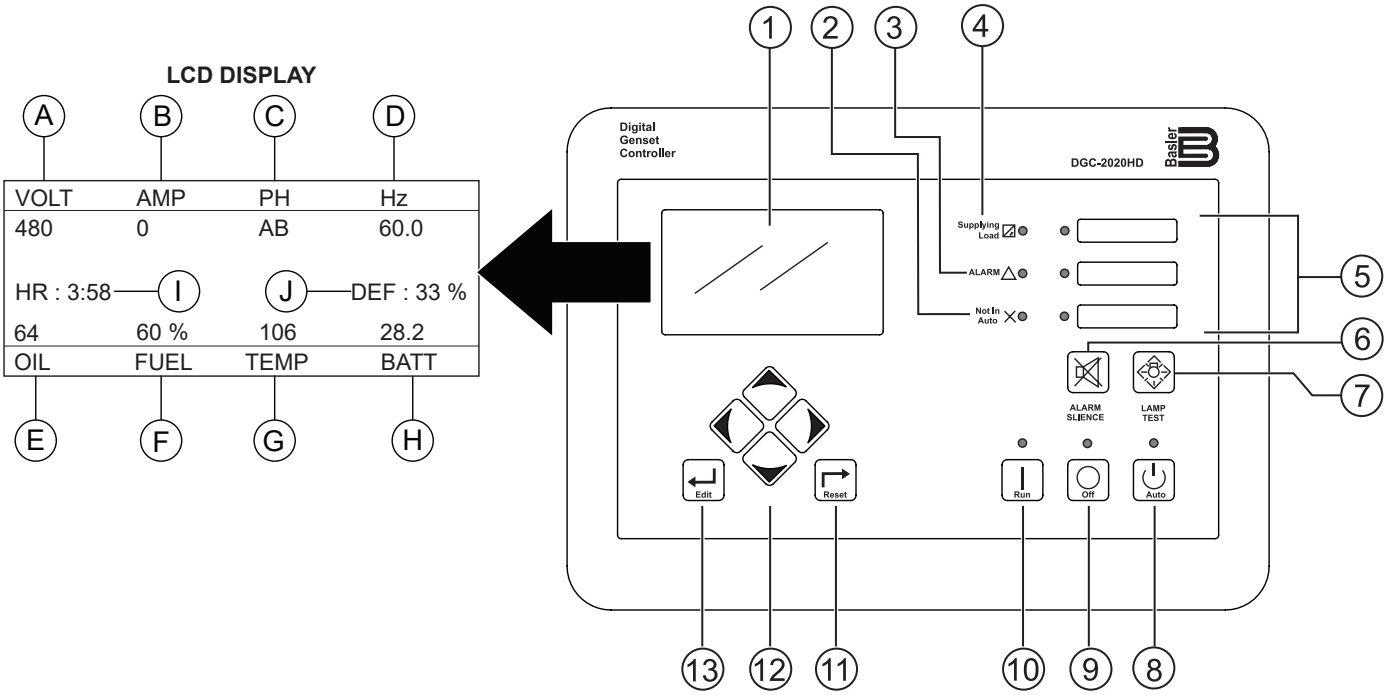

Figure 6. Basler DGC-2020HD

The definitions below describe the controls and functions of the Basler DGC-2020HD digital genset controller (Figure 6).

1. **LCD Display** — Backlit, 272 × 480-pixel LCD color touch screen serves as the local information source for metering, alarms, pre-alarms, and protective functions. Touch screen capability provides convenient navigation through metering and settings. Display operation is maintained down to –4°F (−20°C).

   A. **AC Voltmeter** — Indicates the phase-to-phase voltage of the output terminals.

   B. **AC Ammeter** — Indicates the current flowing to the load connected to the output terminals.

   C. **Phase Indicator** — Indicates the line at which the AC voltage is measured. A = U phase, B = V phase, C = W phase.

   D. **Frequency Meter** — Indicates the output frequency of the generator in hertz (Hz). Normally 60 Hz.

   E. **Oil Pressure Gauge** — During normal operation this gauge should read between 56–100 psi. (386–689 kPa). When starting the generator the oil pressure may read a little higher, but after the engine warms up the oil pressure should return to the correct pressure range.

   F. **Fuel Gauge** — Indicates the level (%) of diesel fuel in the fuel tank.

   G. **Water Temperature Gauge** — During normal operation this gauge should read between 167°–194°F (75°–90°C).

   H. **Battery Voltmeter** — During normal operation this gauge should indicate a minimum of 25 VDC.

   I. **Run Hours Meter** — Indicates the engine run time.

   J. **DEF Gauge** — Indicates the level (%) of diesel exhaust fluid in the DEF tank.

2. **Not In Auto Indicator** — This red LED lights when the DGC-2020HD is **not** operating in **Auto mode**.

3. **Alarm Indicator** — This red LED lights continuously during alarm conditions and flashes during pre-alarm conditions.

4. **Supplying Load Indicator** — This green LED lights when the generator current is greater than the emergency power supply (EPS) threshold current.

5. **Voltage Selection Indicators** — These three LEDs light to indicate the selected voltage. The **upper** lamp indicates **3-phase, 480-volt** operation. The **middle** lamp indicates **3-phase, 240-volt** operation. The **lower** lamp indicates **idle running** operation.

6. **Alarm Silence Pushbutton** — Press this button to open the relay output programmed as the horn output.

7. **Lamp Test Pushbutton** — Press this button to test the DGC-2020HD indicators by exercising all LCD pixels and lighting all LEDs.

8. **Auto Pushbutton and Mode Indicator** — Press the **Auto button** to place the DGC-2020HD in **Auto mode**. The green **Auto Mode LED** lights when Auto mode is active.

   While in Auto mode, if the unit's auto-start contacts are connected to a transfer switch and the contacts between the terminals are closed, the unit will start and automatically close the circuit breaker.

   If running in parallel, the Basler controller will command the unit to start and close the breaker based on load demand. If a failure occurs with another generator in the paralleled system, the controller will start and synchronize, then close the motorized breaker to electrically lock the unit in parallel.

   If the bus is dead it will immediately close the circuit breaker to provide power to the load(s). If the bus is already hot from another generator it will first synchronize, then close its breaker, then slowly ramp up to share load if load is present.

9. **Off Pushbutton and Mode Indicator** — Press this button to place the DGC-2020HD in **Off mode**.The red **Off Mode LED** lights whenever the DGC-2020HD is in Off mode.

10. **Run Pushbutton and Mode Indicator** — Press this button to place the DGC-2020HD in **Run mode**. The green **Run Mode LED** lights whenever Run mode is active.

11. **Reset Pushbutton** — Press this button to cancel a settings editing session and discard any settings changes. When held, this button resets the **Breaker Management pre-alarms**. This button is also used to reset the maintenance interval when pressed for 10 seconds while viewing **Hours Until Maintenance** or the **Maintenance Due pre-alarm**.

12. **Arrow Pushbuttons** — These four buttons are used to navigate through the front panel display menus and to modify settings.

    - The **Left Arrow and Right Arrow buttons** are used to navigate through the menu levels. Press the **Right Arrow button** to move **downward** through the menu levels and press the **Left Arrow button** to move **upward** through the menu levels.

    - The **Up Arrow and Down Arrow buttons** are used to move among items within a menu level. Press the **Down Arrow button** to move to items lower on the list. Press the **Up Arrow button** to move to items higher on the list.

    - During a settings editing session, the Up Arrow and Down Arrow buttons are used to increase and decrease the value of the selected setting. The Right Arrow and Left Arrow buttons move to different digits.

13. **Edit Pushbutton** — Press the **Edit pushbutton** to start an editing session and enable changes to the DGC-2020HD settings. At the conclusion of an editing session, press this button again to save the setting changes.

OUTPUT TERMINAL PANEL

The **output terminal panel** (Figure 8) shown below is provided for the connection of electrical loads. Lift up on the cover to gain access to receptacles and terminal lugs.

NOTICE

Terminal O is **neutral bonded** to the ground from the factory.

NOTICE

Output Terminal Bolt Torque: 1,088.6 lbf·in (123.0 N·m)

OUTPUT TERMINAL FAMILIARIZATION

The output terminal panel (Figure 8) is provided with the following:

- Three (3) 240/139-volt, 50-amp output receptacles
- Three (3) 50-amp circuit breakers
- Two (2) 120-volt, 20-amp GFCI receptacles
- Two (2) 20-amp GFCI circuit breakers
- Eight (8) output terminal lugs (U, V, W, O, Ground)

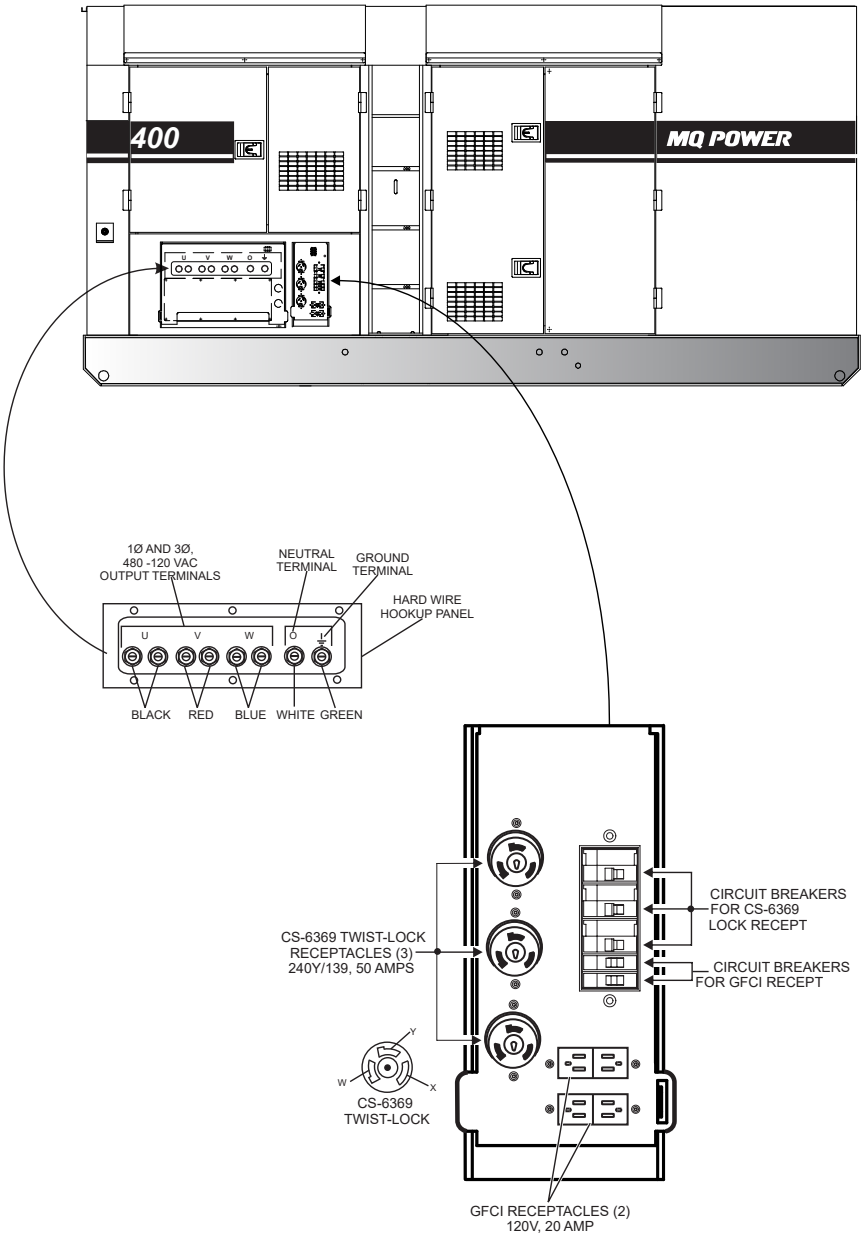

Figure 7. Output Terminal Panel

120-Volt AC GFCI Receptacles

NOTICE

It is recommended that the GFCI receptacles be tested when the generator is initially uncrated. The receptacles should then be tested daily at startup.

There are two 120-volt, 20-amp GFCI (duplex NEMA 5-20R) receptacles provided on the output terminal panel. These receptacles can be accessed in any voltage changeover board position. Each receptacle is protected by a 20-amp circuit breaker. These breakers are located directly above the GFCI receptacles. Remember that the load output (current) of both GFCI receptacles is dependent on the load requirements of the U, V, and W output terminal lugs.

Press the **Reset button** (Figure 8) to reset the GFCI receptacle after it has been tripped. Press the **Test button** in the center of the receptacle to check the GFCI function. Both receptacles should be tested at least once a month. Reference the maintenance section in this manual for further testing of the GFCI receptacle.

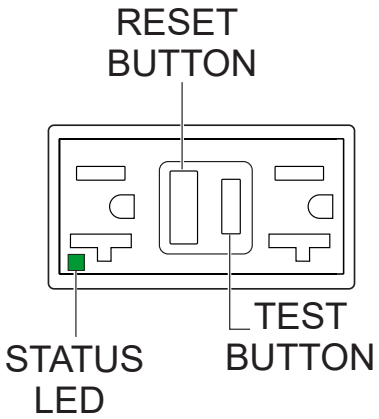

Figure 8. 120-Volt GFCI Receptacle

Twist-Lock Dual-Voltage 240/139-Volt AC Receptacles

There are three 240/139-volt, 50-amp, auxiliary twist-lock (CS-6369) receptacles (Figure 9) provided on the output terminal panel. For 240/139-volt usage, these receptacles can be used at any time during operation. For 208/120-volt usage:

- With the voltage change-over board configured for 480-volt output, use the voltage regulator to adjust the output voltage to 416V, *or*
- With the voltage change-over board configured for 240-volt output, use the voltage regulator to adjust the output voltage to 208V.

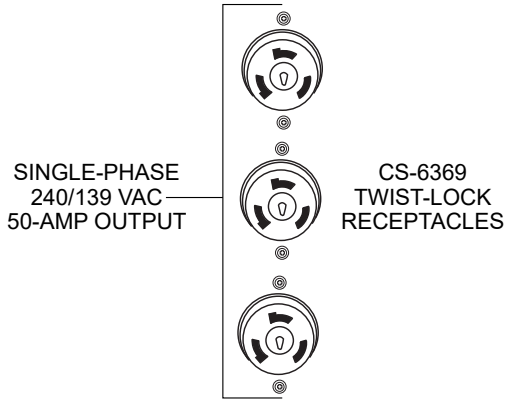

Figure 9. 240/139-Volt Twist-Lock Auxiliary Receptacles

Each auxiliary receptacle is protected by a 50-amp circuit breaker. These breakers are located next to the GFCI receptacles. Remember the load output (current) on all three receptacles is dependent on the load requirements of the output terminal lugs.

The output terminal lugs are located behind a **protective cover** (Figure 10). Unscrew the retaining bolts and lift the cover to gain access to the output terminal lugs.

After the load wires have been securely attached to the output terminal lugs, lower the protective cover and reinstall the retaining bolts.

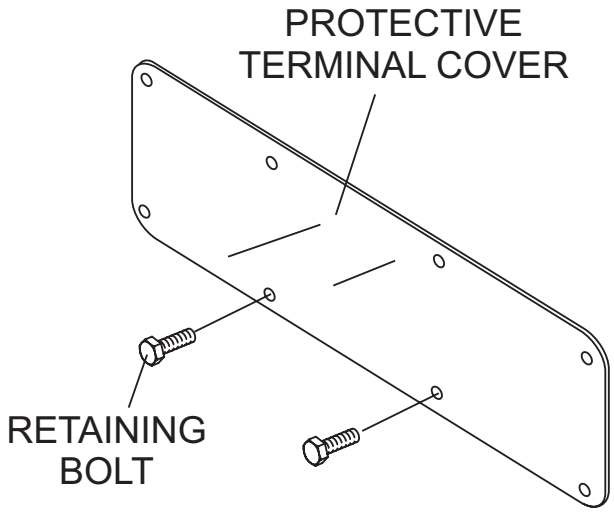

Figure 10. Protective Terminal Cover (Output Terminal Lugs)

Connecting Loads

Loads can be connected to the generator by the output terminal lugs, convenience receptacles, or optional cam-loks (Figure 11). Make sure to read the operation manual before attempting to connect a load to the generator.

To protect the output terminals from overload, a 3-pole, 1000-amp, main circuit breaker is provided. Make sure to switch **ALL** circuit breakers to the **OFF** position prior to starting the engine.

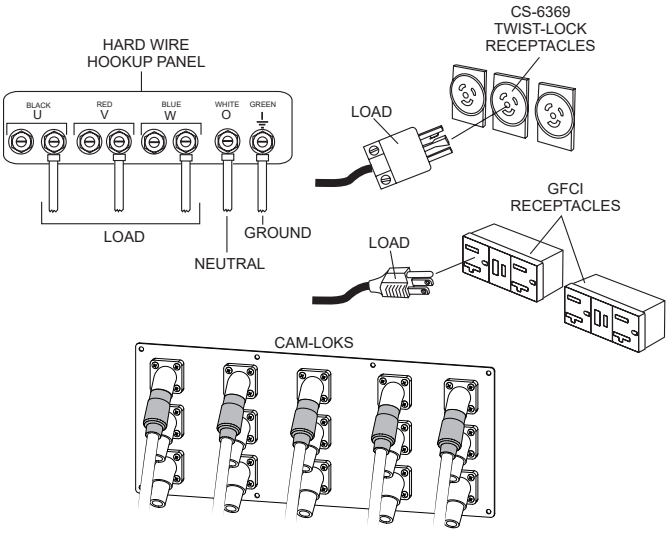

Figure 11. Connecting Loads

Overcurrent Relay

An **overcurrent relay** (Figure 12) is connected to the main circuit breaker. In the event of an overload, both the circuit breaker and the overcurrent relay may trip. If the circuit breaker cannot be reset, the **Reset button** on the overcurrent relay must be pressed. The overcurrent relay is located inside the control box.

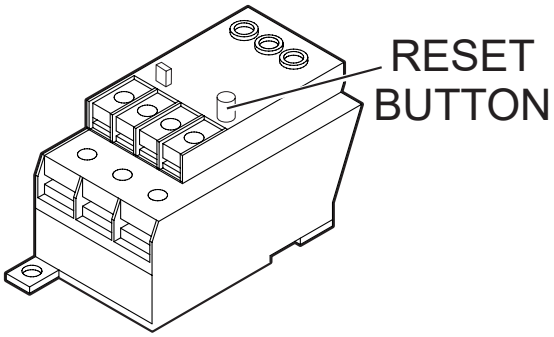

Figure 12. Overcurrent Relay

NOTICE

The **overcurrent relay** monitors the current flowing from the U,V, and W output terminal lugs to the load. In the event of a short circuit or overcurrent condition, it will automatically trip the 1000-amp main circuit breaker.

To restore power to the output terminal panel, press the Reset button on the overcurrent relay and place the main circuit breaker in the **closed (ON)** position.

SINGLE-PHASE LOAD

Always be sure to check the nameplate on the generator and equipment to ensure the wattage, amperage, frequency, and voltage requirements are satisfactorily supplied by the generator for operating the equipment.

Generally, the wattage listed on the nameplate of the equipment is its rated output. Equipment may require 130–150% more wattage than the rating on the nameplate, as the wattage is influenced by the efficiency, power factor, and starting system of the equipment.

NOTICE

If wattage is not given on the equipment's nameplate, approximate wattage may be determined by multiplying the nameplate voltage by the nameplate amperage.

WATTS = VOLTAGE × AMPERAGE

The power factor of this generator is 0.8. See Table 5 below when connecting loads.

Table 5. Power Factor By Load

Type of Load	Power Factor
Single-phase induction motors	0.4–0.75
Electric heaters, incandescent lamps	1.0
Fluorescent lamps, mercury lamps	0.4–0.9
Electronic devices, communication equipment	1.0
Common power tools	0.8

Table 6. Cable Selection (60 Hz, Single-Phase Operation)

Current in Amperes	Load in Watts		Maximum Allowable Cable Length			
	At 100 Volts	At 200 Volts	#10 Wire	#12 Wire	#14 Wire	#16 Wire
2.5	300	600	1,000 ft.	600 ft.	375 ft.	250 ft.
5	600	1,200	500 ft.	300 ft.	200 ft.	125 ft.
7.5	900	1,800	350 ft.	200 ft.	125 ft.	100 ft.
10	1,200	2,400	250 ft.	150 ft.	100 ft.	
15	1,800	3,600	150 ft.	100 ft.	65 ft.	
20	2,400	4,800	125 ft.	75 ft.	50 ft.	
CAUTION: Equipment damage can result from low voltage.						

NOTICE

Cable selection table is a general guideline. **ALWAYS** consult local and national electrical codes when sizing cables.

THREE-PHASE LOAD

When calculating the power requirements for 3-phase power, use the following equation:

$$\text{KVA} = \frac{\text{VOLTAGE} \times \text{AMPERAGE} \times 1.732}{1000}$$

NOTICE

If 3-phase load (kVA) is not given on the equipment nameplate, approximate 3-phase load may be determined by multiplying voltage by amperage by 1.732.

NOTICE

Motors and motor-driven equipment draw much greater current for starting than during operation.

An inadequately sized connecting cable which cannot carry the required load can cause a voltage drop which can burn out the appliance or tool and overheat the cable. See Table 6.

- When connecting a resistance load such as an incandescent lamp or electric heater, a capacity of up to the generating set's rated output (kW) can be used.
- When connecting a fluorescent or mercury lamp, a capacity of up to the generating set's rated output (kW) multiplied by 0.6 can be used.
- When connecting an electric drill or other power tools, pay close attention to the required starting current capacity.
- When connecting ordinary power tools, a capacity of up to the generating set's rated output (kW) multiplied by 0.8 can be used.

DANGER

Before connecting this generator to any building's electrical system, a **licensed electrician** must install an **isolation (transfer) switch**. Serious damage to the building's electrical system may occur without this transfer switch.

PowerBalance® (Figure 13) is an optional load management solution that helps protect the engine generator from problems resulting from sustained low-load operations (defined as less than 30% of the generator full-load rating).

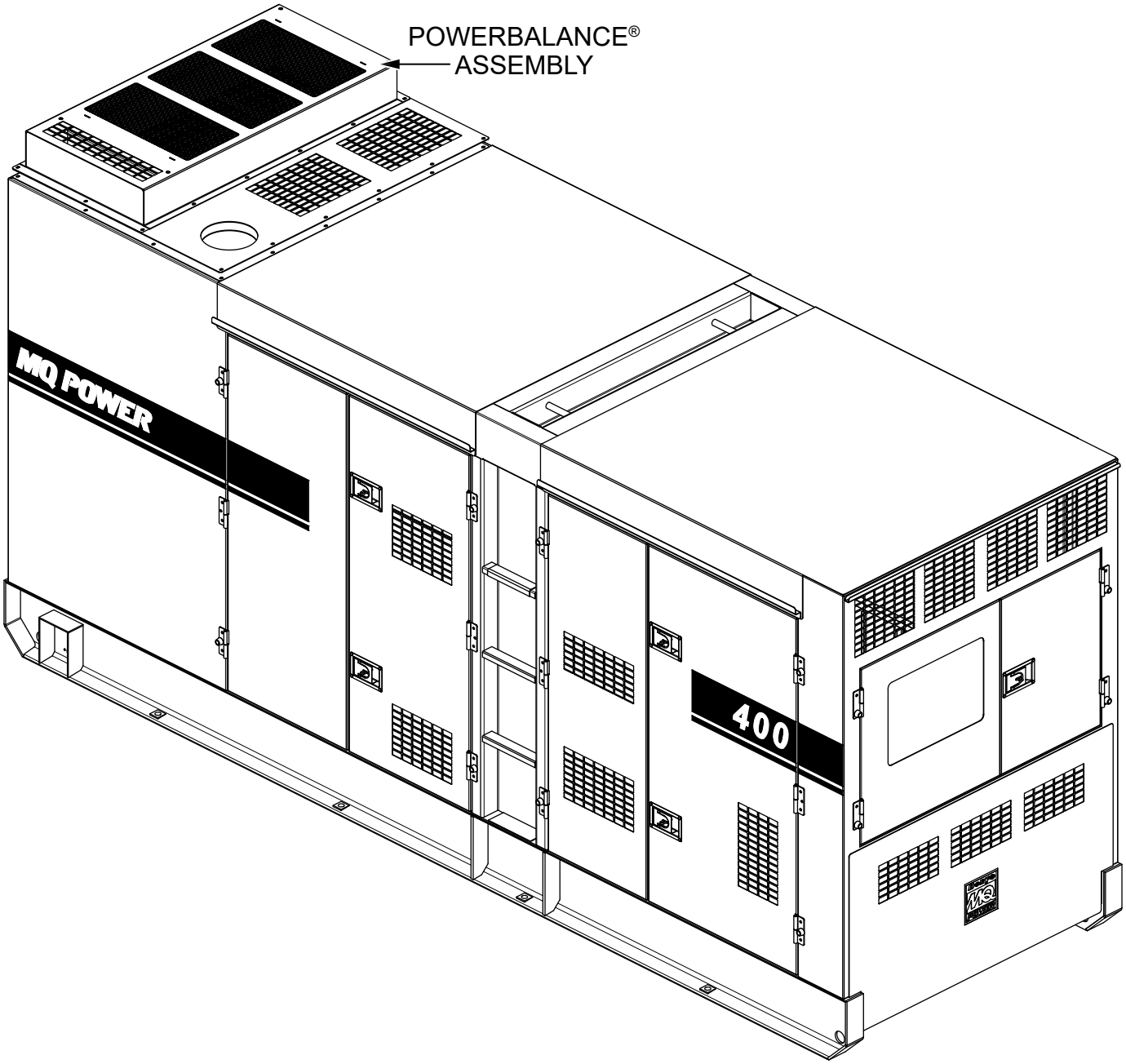

Figure 13. PowerBalance®

- PowerBalance® continuously monitors engine load. With the main circuit breaker closed, the load management controller senses and increases engine load automatically using resistive coils when the controller determines that the temperature and/or load is too low.
- When additional load demands are placed on the generator that bring it to an optimum level, PowerBalance® will automatically deactivate this additional load and remain ready for reactivation should exhaust temperatures drop.

GENERATOR OUTPUT VOLTAGES

A wide range of voltages (Table 7) is available for many different applications.

Table 7. Available Voltages

UVWO Output Terminal Lugs	Voltage Change-Over Board 3-Phase 240/139V Position			Voltage Change-Over Board 3-Phase 480/277V Position		
3Ø Line-Line	208V	220V	240V	416V	440V	480V
1Ø Line-Neutral	120V	127V	139V	240V	254V	277V

Voltage Change-Over Board

Voltages are selected by applying six jumper plates to the **voltage change-over board** (Figure 14), which is located inside the control box behind the generator control panel. This board has been provided for ease of voltage selection.

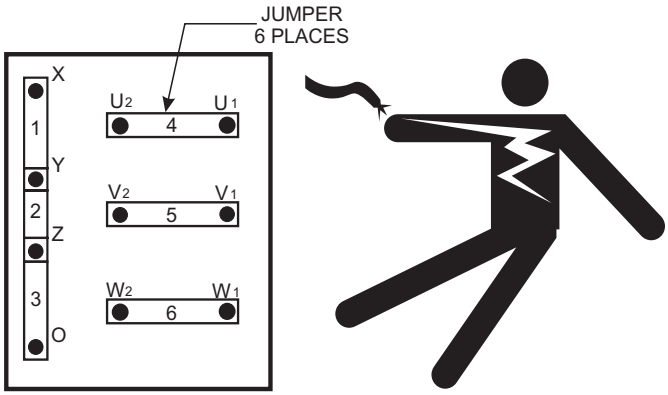

Figure 14. Voltage Change-Over Board

WARNING

NEVER attempt to place jumper plates on the **voltage change-over board** while the generator is in operation. There exists the possibility of **electrocution**, **electrical shock**, **or burn**, **which can cause severe bodily harm or even death!**

NOTICE

Make sure the tie bolts securing the voltage change-over board bus bars are **secure** and **tight**. The possibility exists of arcing that could cause a fire. Torque bolts to 554.9 lbf·in (62.7 N·m).

VOLTAGE REGULATOR

To obtain some of the voltages listed in Table 7 will require a fine voltage adjustment using the **voltage regulator** (Figure 15) located on the control panel.

Figure 15. Voltage Regulator

Maximum Amps

Table 8 shows the **maximum** amps the generator can provide. **DO NOT** exceed the maximum amps as listed.

Table 8. Generator Maximum Amps

Rated Voltage	Maximum Amps
Single Phase 120 Volts	888.9 amps (4 wire)
Single Phase 240 Volts	444.4 amps (4 wire)
Three Phase 208 Volts	962.3 amps
Three Phase 240 Volts	962.3 amps
Three Phase 480 Volts	481.1 amps
Main Line Circuit Breaker Rating	1,000 amps
Overcurrent Relay Trip Set Point	480 amps

UVWO TERMINAL OUTPUT VOLTAGES

Various output voltages can be obtained using the UVWO output terminal lugs. The voltages at the terminals are dependent on the placement of the jumper plates (6) on the **voltage change-over board** and the adjustment of the **voltage regulator**.

The voltage change-over board determines the range of the output voltage and can be configured in two different positions that provide 6 different output voltages at the UVWO output terminals. The generator is shipped from the factory in the 240-volt configuration. The voltage regulator (VR) allows the user to increase or decrease the selected voltage.

NOTICE

Make sure the tie bolts securing the voltage change-over board bus bars are **secure** and **tight**. The possibility exists of arcing that could cause a fire. Torque bolts to 554.9 lbf·in (62.7 N·m).

NOTICE

ALWAYS make sure that the connections to the UVWO terminals are **secure** and **tight**. The possibility exists of arcing that could cause a fire. Torque tie bolts to 1,088.6 lbf·in (123.0 N·m).

3-Phase 240-Volt UVWO Terminal Output Voltages

1. Jumper the **voltage change-over board** for **240-volt operation** as shown in Figure 16.

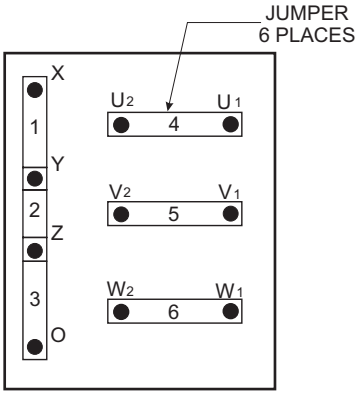

Figure 16. Voltage Change-Over Board 3-Phase 240/139-Volt Configuration

2. Connect the load wires to the UVWO terminals as shown in Figure 17.

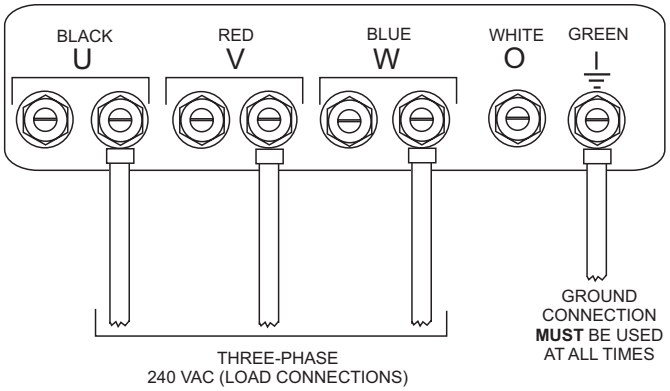

Figure 17. UVWO Terminal Lugs 3-Phase 240-Volt Connections

3. Turn the **voltage regulator** (Figure 18) clockwise to increase voltage output as needed. Turn counterclockwise to decrease voltage output.

Figure 18. Voltage Regulator

Single-Phase 240-Volt UVWO Terminal Output Voltages

1. Make sure the **voltage change-over board** is jumpered for **240-volt operation** as shown in Figure 16.
2. Connect the load wires to the UVWO terminals as shown in Figure 19.

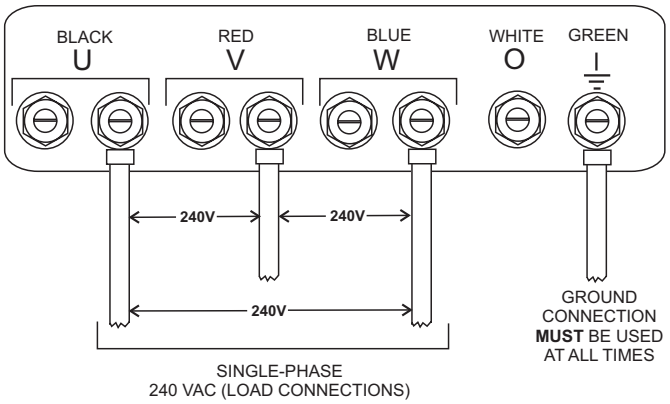

Figure 19. UVWO Terminal Lugs Single-Phase 240-Volt Connections

Single-Phase 120-Volt UVWO Terminal Output Voltages

1. Make sure the **voltage change-over board** is jumpered for **240-volt operation** as shown in Figure 16.
2. Adjust the **voltage regulator** (Figure 18) for an output of 208 volts to obtain 120 volts at the UVWO terminals.
3. Connect the load wires to the UVWO terminals as shown in Figure 20.

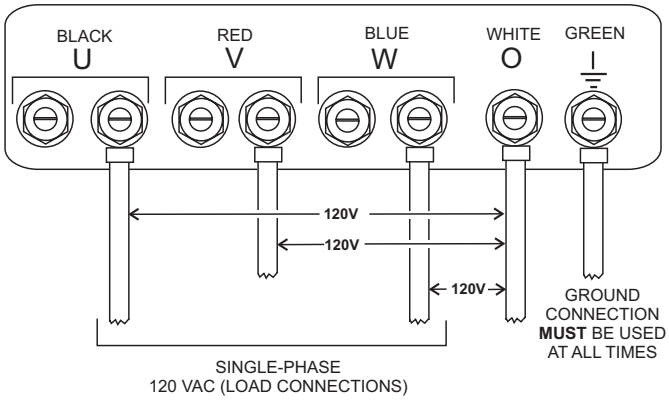

Figure 20. UVWO Terminal Lugs Single-Phase 120-Volt Connections

3-Phase 480-Volt UVWO Terminal Output Voltages

1. Jumper the **voltage change-over board** for **480-volt operation** as shown in Figure 21. This configuration uses 6 jumper plates in 3 different positions. Remember there are 2 jumper plates at every position. Every jumper plate **must be used**.

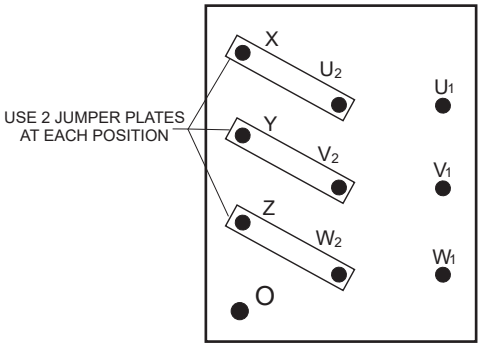

Figure 21. Voltage Change-Over Board 3-Phase 480/277-Volt Configuration

2. Connect the load wires to the UVWO terminals as shown in Figure 22.

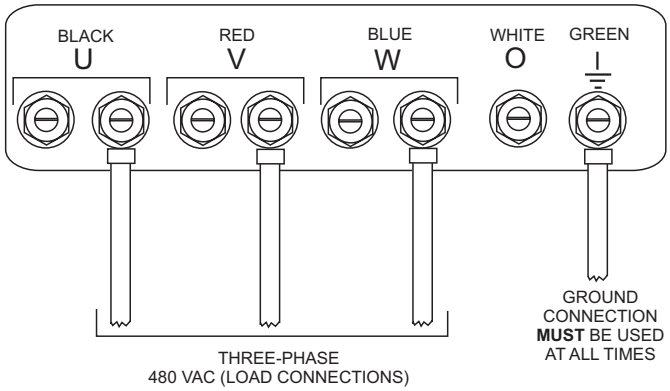

Figure 22. UVWO Terminal Lugs 3-Phase 480-Volt Connections

Single-Phase 480-Volt UVWO Terminal Output Voltages

1. Make sure the **voltage change-over board** is jumpered for **480-volt operation** as shown in Figure 21.
2. Connect the load wires to the UVWO terminals as shown in Figure 23.

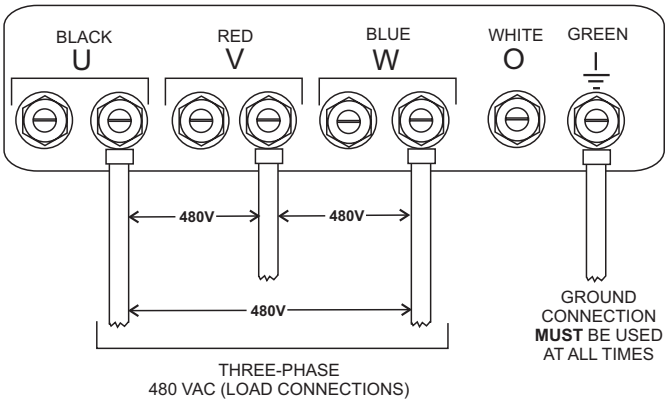

Figure 23. UVWO Terminal Lugs Single-Phase 480-Volt Connections

Single-Phase 277-Volt UVWO Terminal Output Voltages

1. Make sure the **voltage change-over board** is jumpered for **480-volt operation** as shown in Figure 21.
2. Connect the load wires to the UVWO terminals as shown in Figure 24.

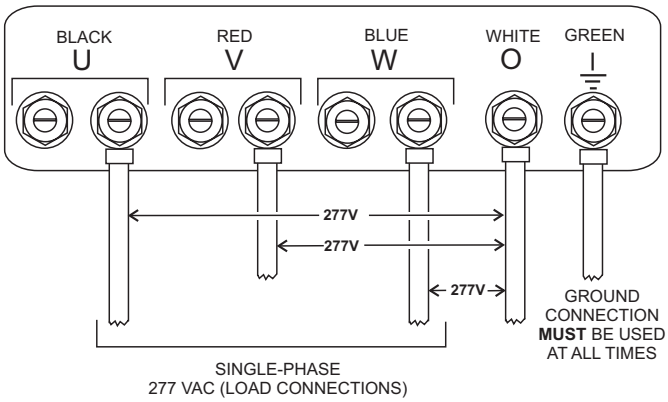

Figure 24. UVWO Terminal Lugs Single-Phase 277-Volt Connections

ENGINE OIL CHECK

1. To check the engine oil level, place the generator on secure, level ground with the engine stopped.
2. Remove the **dipstick** from its holder (Figure 25) and wipe it clean.

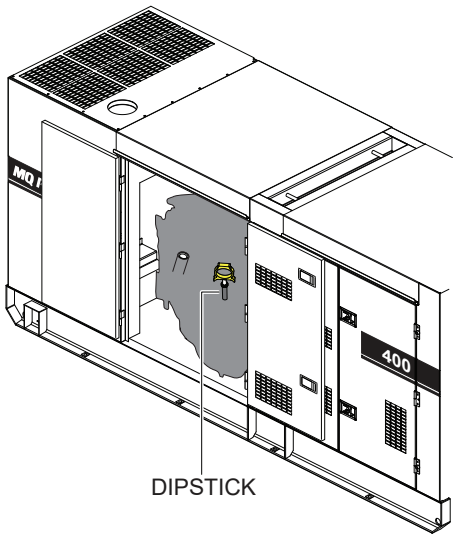

Figure 25. Engine Oil Dipstick

3. Reinsert the dipstick, then remove the dipstick from its holder. Check the oil level shown on the dipstick (Figure 26).

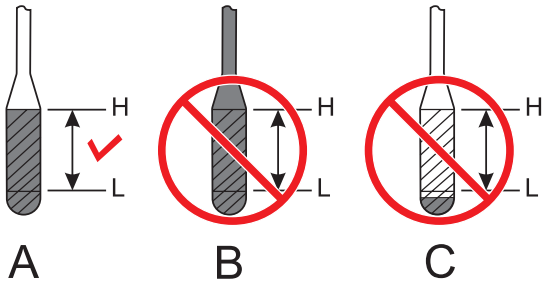

Figure 26. Engine Oil Dipstick

4. Verify that the engine oil level is maintained between the H and L markings on the dipstick as shown in Figure 26**A**.
5. If the engine oil level is low (Figure 26**C**), remove the cap from the **oil filler port** (Figure 27) and fill to a safe operating level (max) as indicated by the dipstick (Figure 26**A**). Fill with the recommended oil type listed in Table 9. Maximum oil capacity is 15.1 gallons (57 liters).

> ***NOTICE***
>
> When adding engine oil, **DO NOT** overfill (Figure 26**B**).

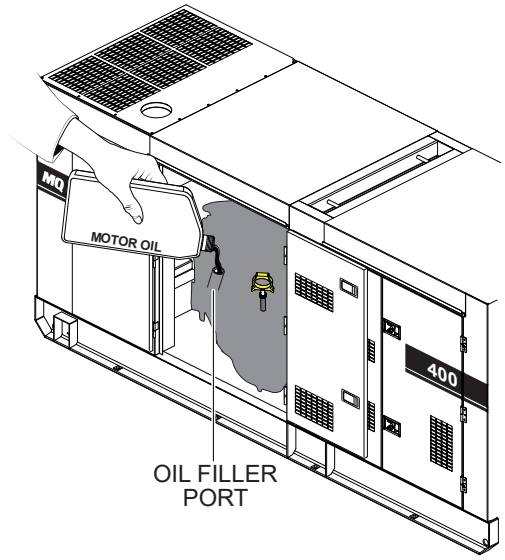

Figure 27. Engine Oil Filler Port

6. When checking the engine oil, be sure to check if the oil is clean. If the oil is not clean, drain the oil as referenced in the maintenance section of this manual.
7. Allow enough time for any added oil to make its way to the oil pan before rechecking.

Table 9. Oil Selection Chart

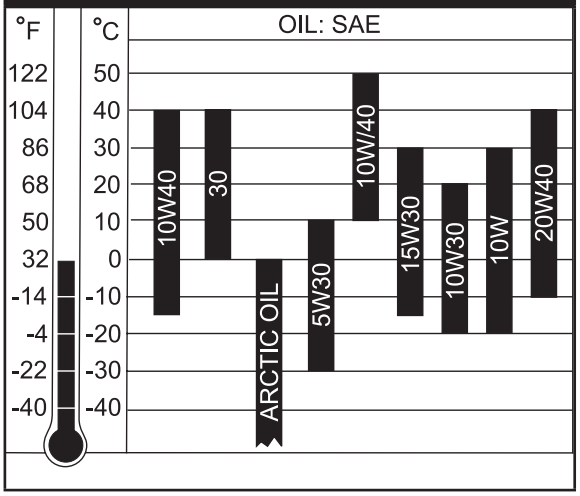

FUEL CHECK

DANGER

Fuel spillage on a **hot** engine can cause a **fire or explosion**. If fuel spillage occurs, wipe up the spilled fuel completely to prevent fire hazards. **NEVER** smoke around or near the generator. **ALWAYS** shut down the engine prior to cleaning up any spilled fuel.

NOTICE

ALWAYS check the DEF tank level when adding fuel.

Refilling The Fuel System

CAUTION

ONLY properly trained personnel who have read and understand this section should refill the fuel tank.

ALWAYS fill the **fuel tank** (Figure 28) with clean, fresh, **#2 diesel fuel**. Pay attention to the fuel tank capacity when replenishing fuel. **DO NOT** fill the fuel tank beyond its capacity.

Close the **fuel filler cap** (Figure 28) tightly after filling. Handle fuel in a safety container. If the container does not have a spout, use a funnel. Wipe up any spilled fuel **immediately**.

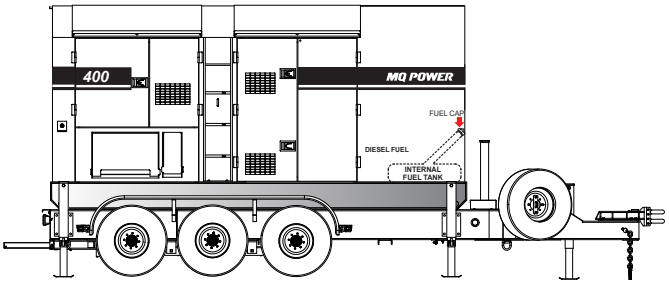

Figure 28. Fuel Tank

Refueling Procedure

WARNING

Diesel fuel and its vapors are dangerous to your health and the surrounding environment. Avoid inhalation of fumes and contact with skin.

1. **Level Tanks** — Make sure fuel cells are level with the ground. Failure to do so will cause fuel to spill from the tank before reaching full capacity (Figure 29).

CAUTION

ALWAYS place the trailer on firm, level ground before refueling to prevent spilling and to maximize the amount of fuel that can be added to the tank.

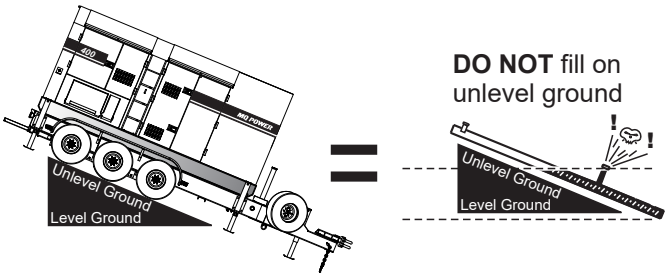

Figure 29. Only Fill On Level Ground

NOTICE

ONLY use **#2 diesel fuel** (ultra-low sulfur diesel fuel) when refueling.

2. Remove the fuel cap and fill the tank as shown in Figure 30.

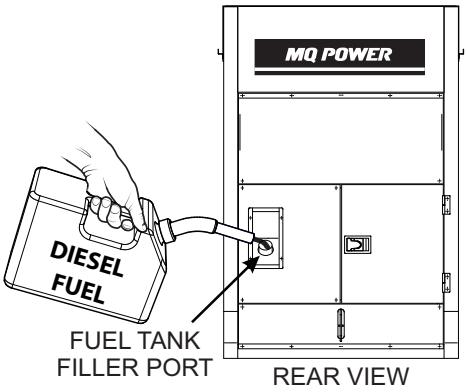

Figure 30. Fueling The Generator

3. **NEVER overfill the fuel tank.** When refueling, **DO NOT** wait for fuel to rise inside the filler neck (Figure 31). Leave room for fuel expansion. Fuel expands when heated (Figure 32).

Figure 31. Full Fuel Tank

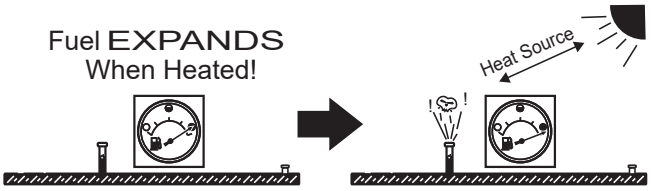

Figure 32. Fuel Expansion

DIESEL EXHAUST FLUID

Diesel exhaust fluid (DEF) is an aqueous solution made with 32.5% high-purity **urea (carbamide)** and 67.5% **deionized water**. DEF is used as a consumable in **selective catalytic reduction (SCR)** in order to lower NO_x concentration from diesel exhaust emissions.

ALWAYS check the DEF level when refueling. Before initial start-up, completely fill the DEF tank with DEF fluid. **DO NOT** overfill.

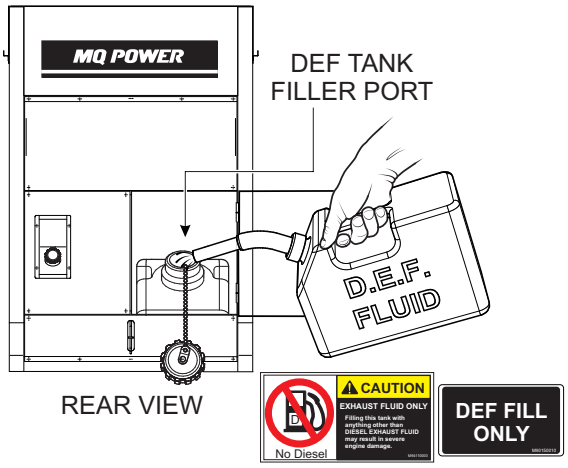

Figure 33. Filling The DEF Tank

DEF Refilling

> ***NOTICE***
>
> **ONLY** fill the DEF tank with **diesel exhaust fluid**. Any other type of fluid may cause severe engine damage.

1. Make sure the engine is **OFF**.
2. Remove the cap from the DEF tank filler port (Figure 33).
3. Add diesel exhaust fluid to the tank. **DO NOT** overfill.
4. Reinstall the DEF tank cap. Tighten securely.

DEF Refilling (Continuous Operation)

It is recommended to **shut down the engine** prior to refilling the DEF tank. However, during special applications where shutdown is not possible, it is recommended to **ONLY** refill the DEF tank when the fluid level has been consumed down to 50%.

The DEF level sending unit requires a gradual DEF level decrease during continuous operation to validate proper operation. Failure of this sensor to report the decrease could result in an engine shutdown. An engine service technician would be required to remedy the shutdown.

COOLANT (ANTIFREEZE/SUMMER COOLANT/WATER)

Isuzu recommends antifreeze/summer coolant for use in their engines, which can be purchased in concentrate (and mixed with 50% demineralized water) or pre-diluted. See the **Isuzu engine owner's manual** for further details.

WARNING

When adding coolant/antifreeze mix to the radiator, **DO NOT** remove the radiator cap until the unit has completely cooled. The possibility of **hot!** coolant exists which can cause **severe burns**.

Day-to-day addition of coolant is done from the reserve tank. When adding coolant to the radiator, **DO NOT** remove the radiator cap until the unit has completely cooled. See Table 10 for engine, radiator, and reserve tank coolant capacities.

Table 10. Coolant Capacity

Engine and Radiator	19.4 gal. (73.6 liters)
Reserve Tank	See markings

NOTICE

Normally, only the coolant level in the reserve tank needs to be checked. However, the radiator cap should be opened once a week to verify that coolant is visible (full) inside the radiator.

Verify that the coolant level in the **coolant reserve tank** is between the **FULL** and **LOW** markings as shown in Figure 34.

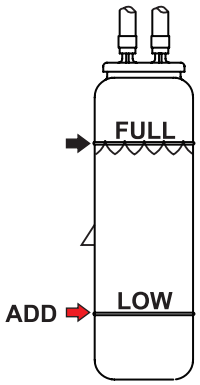

Figure 34. Coolant Reserve Tank

Operation In Freezing Weather

When operating in freezing weather, be certain the proper amount of antifreeze (Table 11) has been added.

Table 11. Coolant Capacity

Climate	Outside Temperature	Longlife Coolant Concentration
Warm	10°F (–12°C) or Above	30%
Cold	–22°F (–30°C) or Above	50%

NOTICE

When the antifreeze is mixed with water, the antifreeze mixing ratio **must be** less than 50%.

Cleaning The Radiator

The engine may overheat if the radiator cooling fins (Figure 35) become overloaded with dust or debris. Periodically clean the radiator fins with compressed air. Cleaning inside the machine is dangerous, so clean only with the engine turned **OFF** and the negative battery terminal disconnected.

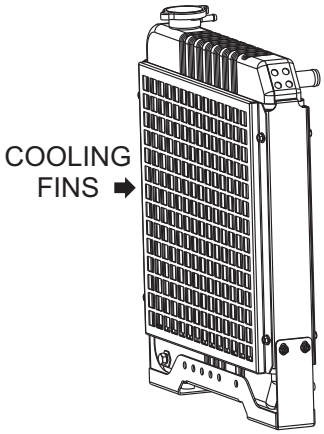

Figure 35. Radiator (Cooling Fins)

ENGINE AIR CLEANER

Periodic cleaning and replacement of the **engine air cleaner** is necessary. Inspect the air cleaner in accordance with the **Isuzu engine owner's manual**.

FAN BELT TENSION

A slack fan belt may contribute to overheating, or to insufficient charging of the battery. Inspect the fan belt for damage and wear and adjust it in accordance with the **Isuzu engine owner's manual**.

The fan belt tension is proper if the fan belt bends 10 to 15 mm when depressed with the thumb as shown in Figure 36.

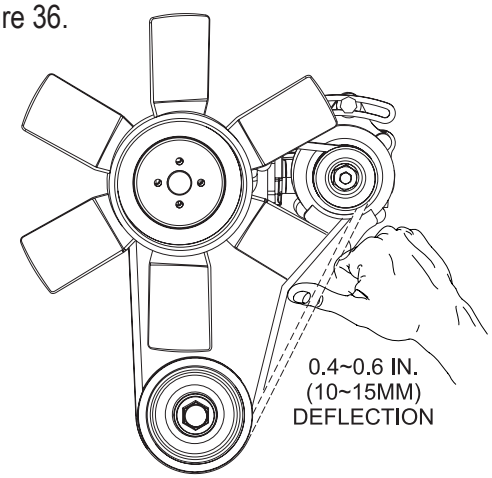

Figure 36. Fan Belt Tension

CAUTION

NEVER place hands near the belts or fan while the generator set is running.

BATTERY

This unit is of negative ground. **DO NOT** connect in reverse. **ALWAYS** maintain the battery fluid level between the specified marks. Battery life will be shortened if the fluid level is not properly maintained. Add only **distilled water** when replenishment is necessary.

DO NOT overfill. Check to see whether the battery cables are loose. Poor contact may result in poor starting or malfunctions. **ALWAYS** keep the terminals firmly tightened. Coat the terminals with an approved battery terminal treatment compound. Replace the battery only with the recommended type battery. The battery type used in this generator is BCI Group 27.

The battery is sufficiently charged if the specific gravity of the battery fluid is 1.28 (at 68°F). If the specific gravity should fall to 1.245 or lower, it indicates that the battery is dead and needs to be recharged or replaced.

Before charging the battery with an external electric source, be sure to disconnect the battery cables.

Battery Cable Installation

Connect the two 12-volt batteries **in series** (24-volt system) as shown in Figure 37. Make sure the battery cables are properly connected to the battery terminals. Connect the **red cable** to the **positive terminal** of one battery, and connect the **black cable** to the **negative terminal** of the other battery.

CAUTION

ALWAYS disconnect the negative terminal first and reconnect the negative terminal last.

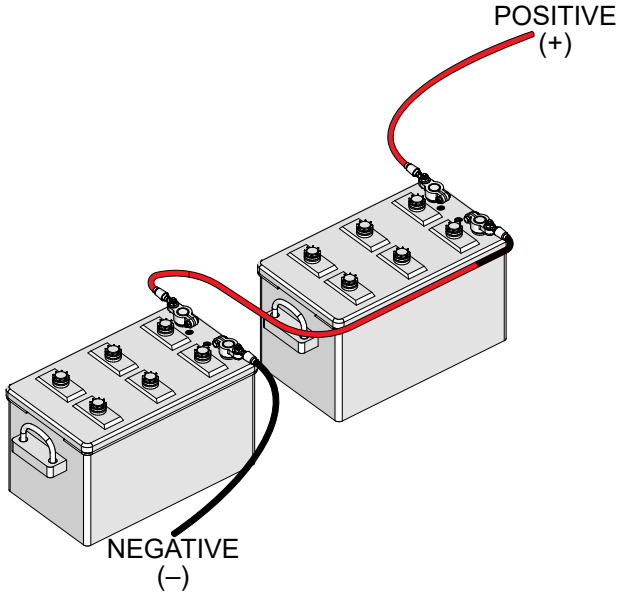

Figure 37. Battery Connections

When connecting the batteries:

1. **NEVER** connect the battery cables to the battery terminals while the **Control Power switch** is in the **ON** position. **ALWAYS** make sure that this switch is in the **OFF** position when connecting the batteries.
2. Place a small amount of battery terminal treatment compound around each battery terminal. This will ensure a good connection and help prevent corrosion around the battery terminals.

NOTICE

If the battery cables are connected incorrectly, electrical damage to the generator will occur. Pay close attention to the polarity of the battery when connecting the battery.

NOTICE

Inadequate battery connections may cause poor starting of the generator or other malfunctions.

Battery Switch

The **Battery switch** (Figure 38) connects and disconnects the battery. Place the switch in the **ON** position prior to starting the generator. When the generator is not in use, place the switch in the **OFF** position.

NOTICE

NEVER set the battery switch to the **OFF** position **while the engine is running**. The engine may not be able to be stopped by normal operation, and damage to the equipment may result.

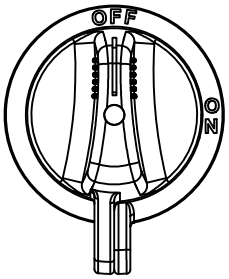

Figure 38. Battery Switch

ALTERNATOR

The polarity of the alternator is negative grounding type. When an inverted circuit connection takes place, the circuit will be in short circuit instantaneously resulting in alternator failure.

NOTICE

DO NOT put water directly on the alternator. Entry of water into the alternator can cause corrosion and damage to the alternator.

WIRING

Inspect the entire generator for bad or worn electrical wiring or connections. If any wiring or connections are exposed (insulation missing) replace wiring immediately.

PIPING AND HOSE CONNECTIONS

Inspect all piping, oil hose, and fuel hose connections for wear and tightness. Tighten all hose clamps and check hoses for leaks.

If any fuel or oil hose lines are defective, replace them immediately.

BEFORE STARTING

CAUTION

The engine's exhaust contains harmful emissions. **ALWAYS have adequate ventilation when operating.** Direct exhaust away from nearby personnel.

WARNING

NEVER manually start the engine with the **main**, **GFCI**, **or auxiliary** circuit breakers in the **ON** (closed) position.

1. Make sure all circuit breakers are in the **OFF** position.
2. Make sure the voltage change-over board has been configured for the desired output voltage.

NOTICE

Make sure the tie bolts securing the voltage change-over board bus bars are **secure** and **tight**. The possibility exists of arcing that could cause a fire. Torque bolts to 554.9 lbf·in (62.7 N·m).

3. Place the **Battery switch** (Figure 39) in the **ON** position.

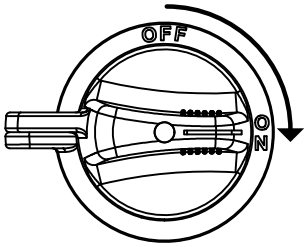

Figure 39. Battery Switch (ON)

4. Place the **Control Power switch** (Figure 40) in the **ON** position.

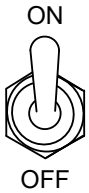

Figure 40. Control Power Switch (ON)

5. Make sure the **Circuit Breaker OFF button LED** is **ON (red)**. See Figure 41.

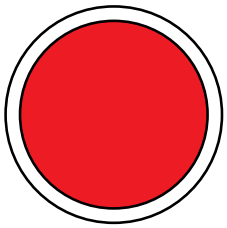

Figure 41. Circuit Breaker OFF Button (ON/RED)

6. Connect the load to the **receptacles, output terminal lugs,** or optional **cam-loks** as shown in Figure 11. These load connection points can be found on the **output terminal panel** and the output terminal panel's hard wire hookup panel.

NOTICE

ALWAYS make sure that the connections to the UVWO terminals are **secure** and **tight**. The possibility exists of arcing that could cause a fire. Torque tie bolts to 1,088.6 lbf·in (123.0 N·m).

7. Close all engine enclosure doors (Figure 42).

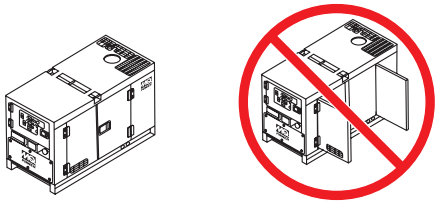

Figure 42. Engine Enclosure Doors

STARTING (MANUAL)

1. To start the engine, press the **Run button** (Figure 43) on the digital controller.

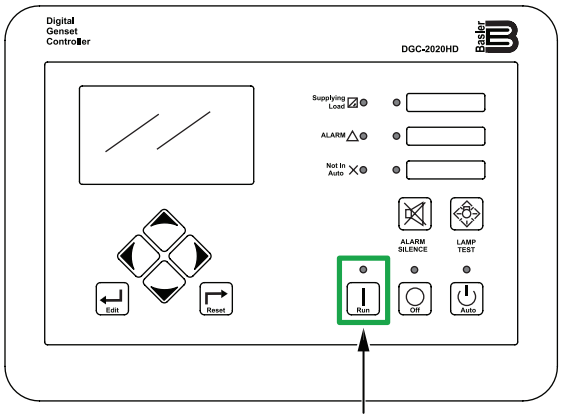

Figure 43. Digital Controller (Run Button)

> ***NOTICE***
>
> If the engine fails to start within 3 attempts, press the **OFF button** on the controller and place the battery switch in the **OFF** position. Wait for at least 1 minute before repeating the starting process.

> ***NOTICE***
>
> The engine will pre-heat automatically in cold weather conditions.The message **"Glow Plug Hold"** will be shown on the controller display and the engine will start automatically after pre-heating.

2. Once the engine starts, let the engine run at low idle for 1–2 minutes. Let the engine idle longer in cold weather conditions. Listen for any abnormal noises. If any abnormalities exist, shut down the engine and correct the problem.

> ***NOTICE***
>
> Once the engine has warmed up, engine speed will automatically increase to 1,800 rpm.

3. The controller display will indicate the 60-cycle output frequency in **HERTZ** (Figure 44**C**).

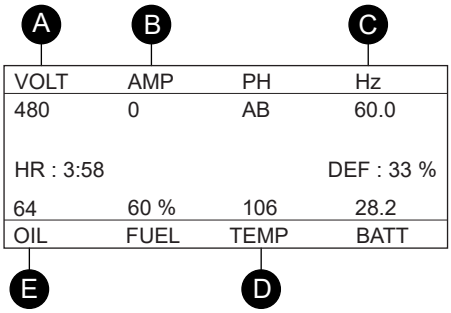

Figure 44. Controller Display

4. The controller display will indicate the generator's output in **VOLTS** (Figure 44**A**).

5. If the voltage is not within the specified tolerance, use the **voltage regulator** (Figure 45) to increase or decrease the desired voltage.

Figure 45. Voltage Regulator

6. The controller display will indicate **zero amps** with no load applied (Figure 44**B**). When a load is applied, the display will indicate the amount of current that the load is drawing from the generator.

7. The controller display will indicate the **oil pressure** of the engine (Figure 44**E**). Under normal operating conditions the oil pressure should be between 56 and 100 psi. (386–689 kPa).

> ***NOTICE***
>
> Oil pressure readings may be higher immediately after starting, especially in cold weather conditions, but should return to normal as the engine temperature increases.

8. The controller display will indicate the **coolant temperature** (Figure 44**D**). Under normal operating conditions the coolant temperature should be 167°–194°F (75°–90°C).

9. Press the **Circuit Breaker ON button** (Figure 46). The button LED will turn **ON (green)** and power will be supplied to the output terminals and receptacles.

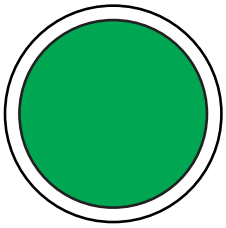

Figure 46. Circuit Breaker ON Button (ON/GREEN)

10. Observe the amperage reading on the controller display (Figure 44**B**) and verify that it is the anticipated amount of current with respect to the load. The ammeter will only display an amperage reading if a load is in use.

11. The generator will run until manually stopped or an abnormal condition occurs.

STARTING (AUTO MODE)

DANGER

Before connecting this generator to any building's electrical system, a **licensed electrician** must install an **isolation (transfer) switch**. Serious damage to the building's electrical system may occur without this transfer switch.

NOTICE

When connecting the generator to an isolation (transfer) switch, **ALWAYS** have power applied to the generator's internal battery charger. This will ensure that the engine will not fail due to a dead battery.

NOTICE

When the generator is set to **Auto mode**, the generator will **automatically start** in the event of commercial power falling below a prescribed level by means of a contact closure that is generated automatically by a transfer switch.

WARNING

When running the generator in **Auto mode**, remember that the generator can start up at any time without warning. **NEVER** attempt to perform any maintenance while the generator is in Auto mode.

NOTICE

When the **Auto button** is pressed, the engine glow plugs will be warmed and the engine will start automatically after a start signal is received from the auto-start contacts.

1. Perform steps 1 through 6 in ***Before Starting*** found in the ***Generator Start-Up Procedure (Manual)*** section.
2. Press the **Auto button** (Figure 47) on the digital controller. When a start signal is received from the auto-start contacts, the engine will start automatically after the preheating process has completed.

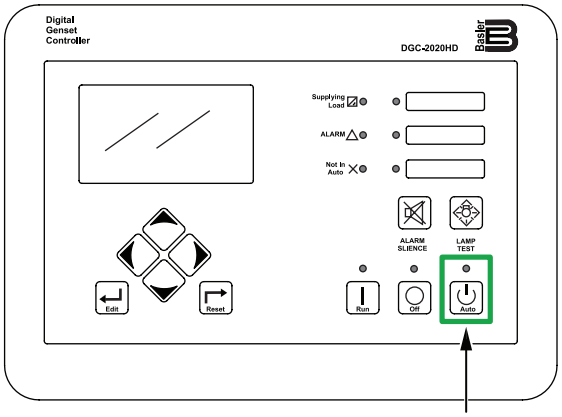

Figure 47. Digital Controller (Auto Button)

3. The main circuit breaker will automatically turn **ON** after the engine starts. Observe that the LED on the **Circuit Breaker ON button** has turned **ON (green)**. See Figure 46.

NORMAL SHUTDOWN PROCEDURE (MANUAL)

WARNING

NEVER stop the engine suddenly except in an emergency.

1. Place the load's ON/OFF switch in the **OFF** position.
2. Press the **Circuit Breaker OFF button**. The button LED will turn **ON (red)**.

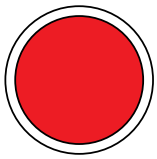

Figure 48. Circuit Breaker OFF Button (ON/RED)

3. Press the **OFF button** on the digital controller (Figure 49) to stop the engine. The engine will stop after a 1-minute cool-down process.

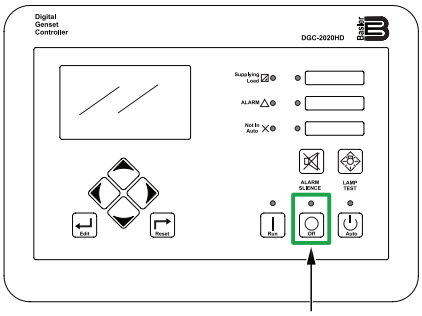

Figure 49. Digital Controller (OFF Button)

4. After the engine has stopped completely, place the **Control Power switch** in the **OFF** position (Figure 50).

Figure 50. Control Power Switch (OFF)

5. Place the **Battery switch** (Figure 51) in the **OFF** position.

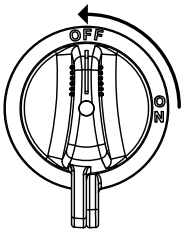

Figure 51. Battery Switch (OFF)

6. Allow sufficient time for adequate cooling, then inspect the entire generator for any damage or loosening of components that may have occurred during operation.

NORMAL SHUTDOWN PROCEDURE (AUTO)

Press the **OFF button** on the digital controller (Figure 49). The circuit breaker will automatically turn **OFF** and the engine will stop after a 1-minute cool-down process.

EMERGENCY SHUTDOWN PROCEDURE

1. To stop the engine in the event of an emergency, push the **Emergency Stop switch** (Figure 52). This switch is located on the side of the generator next to the output terminal panel.

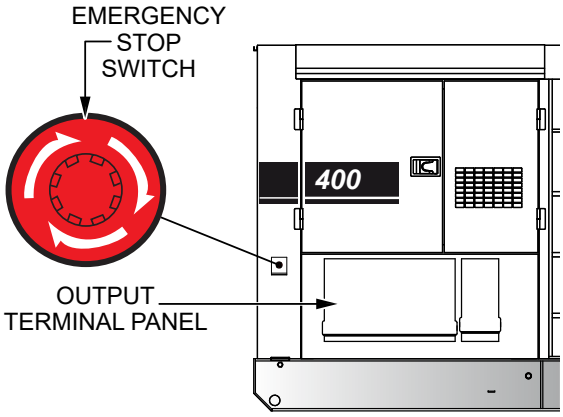

Figure 52. Emergency Stop Switch

2. After the engine has completely stopped, press the **OFF button** on the digital controller (Figure 49) and place the **Control Power switch** in the **OFF** position (Figure 50).
3. The Emergency Stop switch is a push-locked type switch. The switch contact can only be released by rotating the button in the clockwise direction. The engine cannot be restarted until the contact is released (closed).

AUTOMATIC SHUTDOWN SYSTEM

This unit is equipped with safety devices to automatically stop the engine in the event of a fault. Refer to ***Protection Devices*** in the ***Troubleshooting (Diagnostics)*** section for more information.

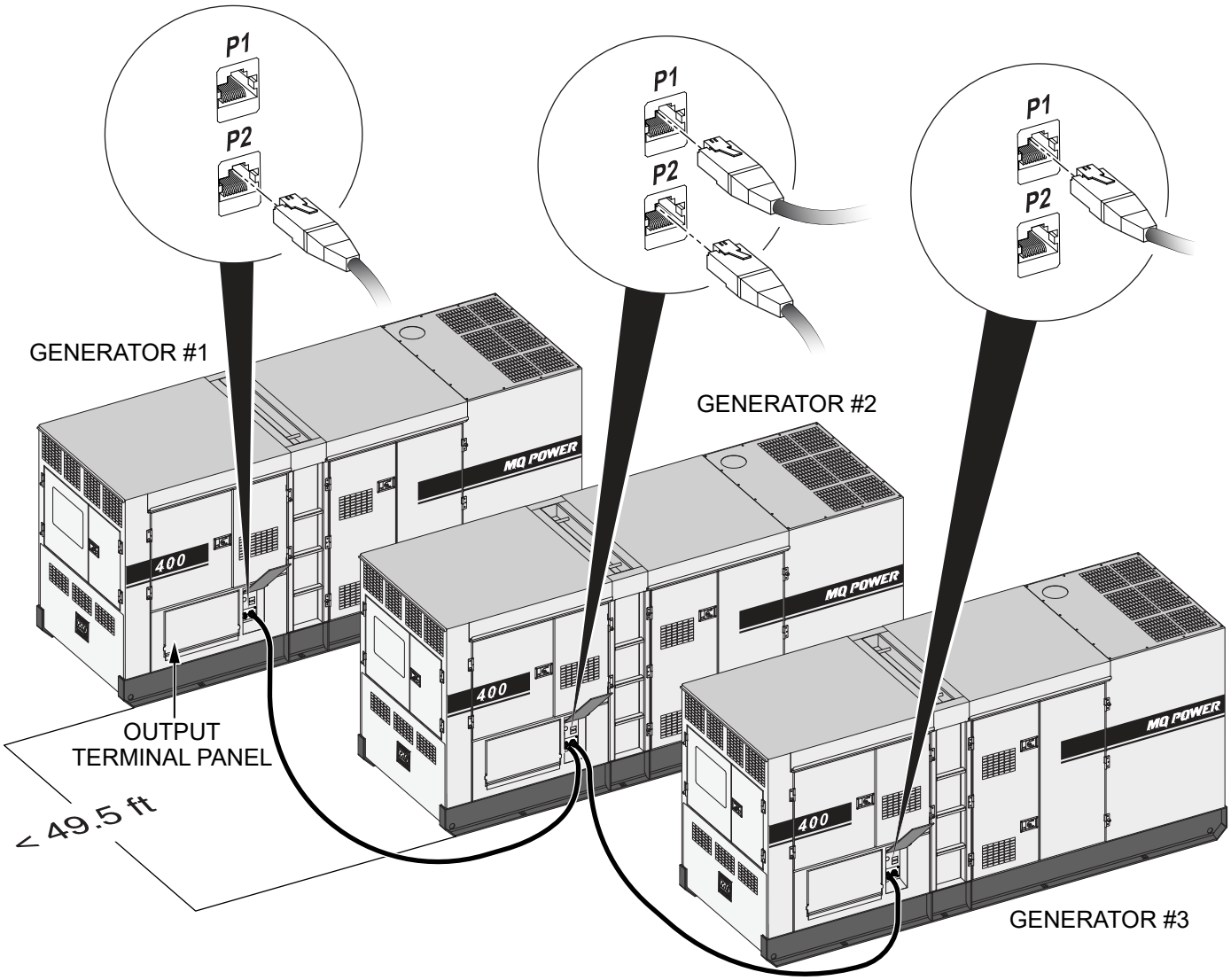

Figure 53. Communication Cable Connections (Parallel Operation)

PARALLEL OPERATION (2 OR MORE UNITS)

NOTICE

To ensure stable operation of multiple generator units connected in parallel and working as one unit, it is necessary to maintain equal voltage, frequency, and engine governor characteristics between them.

For this reason, it is necessary to perform parallel operation using generator units with identical alternator pitch and brand-compatible controllers. **Therefore, using multiple units of the same model generator for paralleling is recommended.**

NOTICE

If the preset voltage (set on the voltage change-over board) is different between the paralleling units, the main circuit breakers **will not turn on**.

Preparation

NOTICE

Make sure the engines of all generator units in the system are turned **OFF** before connecting the units.

1. Make sure the spacing between each generator control panel does not exceed **49.5 feet (15.08 m)**. See Figure 53**A**.
2. **On the first generator**, connect one end of the 49.5-foot (15.08 m) RJ45 ethernet cable to an available ethernet communication port as shown in Figure 53**A**.
3. Connect the other end of the 49.5-foot (15.08 m) RJ45 ethernet cable to an available ethernet communication port **on the second generator** (Figure 53**A**).
4. If there are more generators to be connected to the system (Figure 53**A**):
   - Connect another 49.5-foot (15.08 m) RJ45 ethernet cable to the available ethernet communication port **on the second generator**.
   - Connect the other end of the 49.5-foot (15.08 m) RJ45 ethernet cable to an available ethernet communication port **on the third generator**.
   - Continue connecting all remaining generators in the same manner, until all of the generators in the system are connected via ethernet.

NOTICE

Use **only** category 5, 5e, 6, or 6e ethernet cables with 8C8P modular connectors (RJ45 jacks) to connect the units. Cables must comply with ANSI TIA-568A/TIA-568B standards. Shielded cables are recommended to prevent interference and signal loss.

5. Connect the output terminals on each paralleled unit in accordance with local state/county and National Electrical Code requirements.

NOTICE

ALWAYS make sure that the connections to the UVWO terminals are **secure** and **tight**. The possibility exists of arcing that could cause a fire. Torque tie bolts to 1,088.6 lbf·in (123.0 N·m).

NOTICE

If the phase sequence (connection of U, V, W, O) is incorrect, the protective function of the digital controller will be activated. If this condition occurs, stop the engine and correct the U, V, W, O connections.

6. Make sure the load's power switch is in the **OFF** position.
7. Perform steps 1–4 of the ***Before Starting*** section of the ***Generator Start-Up Procedure (Manual)*** on each generator in the paralleled system.
8. You can verify the number of units connected to the generator network by navigating to the Generator Network Status screen: Metering –> Gen Network Status –> Units.

Starting (Manual)

1. Perform steps 1–4 of the ***Starting Manual*** section of the ***Generator Start-Up Procedure (Manual)*** on each generator in the system.
2. **On the first generator**, press the **Circuit Breaker ON button** (Figure 54).

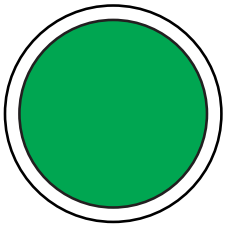

Figure 54. Circuit Breaker ON Button (ON/GREEN)

3. **On the second generator**, press the **Circuit Breaker ON button** (Figure 54). The voltage and frequency will be automatically adjusted. The circuit breaker will turn **ON** automatically when synchronization is complete.

> ***NOTICE***
>
> When synchronization has completed and the units are in normal operation, check the frequency and voltage readings on the digital controller.

4. Repeat step 3 for any additional generator units (3–n) in the paralleled system.
5. When all of the generators' circuit breakers are turned **ON** and no problems or faults are detected, place the load's ON/OFF switch in the **ON** position. Power will be supplied to the load equipment.

Starting (Auto)

1. **On the first generator**, press the **Auto button** (Figure 55) on the digital controller. After the preheating process has completed, the engine will start automatically and the circuit breaker will turn **ON**.

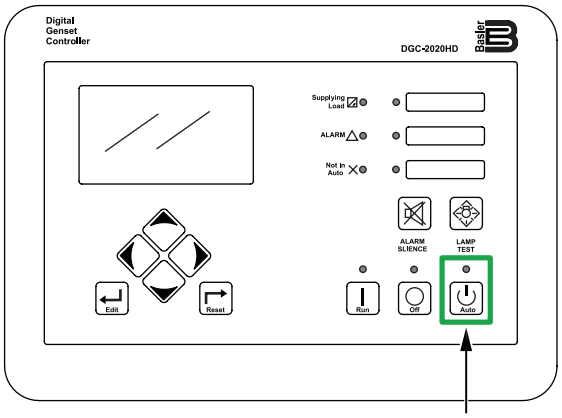

Figure 55. Digital Controller (Auto Button)

2. Once the engine starts, let the engine run at low idle for a few minutes and check for any abnormal noises, vibration, or fluid leakage. If any abnormalities exist, stop the engine and correct the problem.

> ***NOTICE***
>
> Once the engine has warmed up, engine speed will automatically increase to 1,800 rpm.

3. Check the voltage reading on the digital controller display (Figure 56).

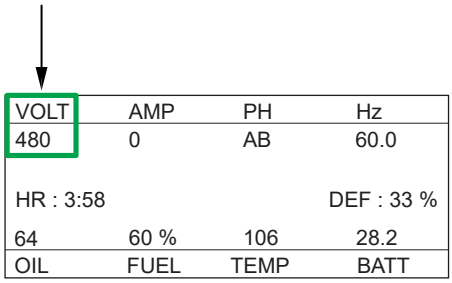

Figure 56. Controller Display (Voltmeter)

4. Perform steps 1–3 **on the second generator**.The voltage and frequency will be automatically adjusted. The circuit breaker will turn **ON** automatically when synchronization is complete.

NOTICE

When synchronization has completed and the units are in normal operation, check the frequency and voltage readings on the digital controller.

NOTICE

If the preset voltage (set on the voltage change-over board) is different between the paralleling units, the main circuit breakers **will not turn on**.

5. Repeat step 4 for any additional generator units (3–n) in the paralleled system.
6. When all of the generators' circuit breakers are turned **ON** and no problems or faults are detected, place the load's ON/OFF switch in the **ON** position. Power will be supplied to the load equipment.

Changing The Number Of Units In Parallel Operation

1. **If the load decreases** during automatic parallel operation and the number of units involved in parallel operation needs to be decreased, push the **Off button** on the unit to be stopped. After the load is automatically transferred to the other paralleling units, the circuit breaker of the stopped unit will automatically turn off and the engine will stop after one minute of cool-down.
2. **If the load increases** during automatic parallel operation and the number of units involved in parallel operation needs to be increased, push the **Auto button** on the unit to be started. After the synchronization process is completed, the load will be redistributed automatically.

NOTICE

If one of the paralleled units runs out of fuel during parallel operation, the other paralleled units could become overloaded, causing circuit breakers to trip due to overcurrent, and the entire paralleling system may shut down.

Parallel Operation Shutdown Procedure (Manual)

1. Place the load's ON/OFF switch in the **OFF** position.
2. Press the **Circuit Breaker OFF button** (Figure 57) on each generator in the paralleled system.

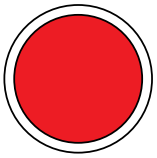

Figure 57. Circuit Breaker OFF Button

3. Press the **OFF button** on the digital controller (Figure 58) on each generator in the paralleled system. Each engine will stop after a 1-minute cool-down process.

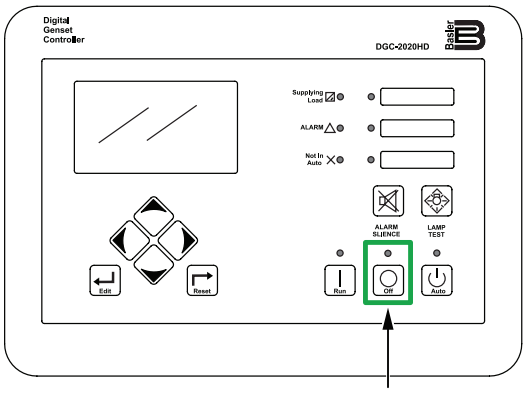

Figure 58. Digital Controller (OFF Button)

4. On each generator, after the engine has completely stopped, place the **Control Power switch** in the **OFF** position (Figure 59) and place the **Battery switch** (Figure 60) in the **OFF** position.

Figure 59. Control Power Switch (OFF)

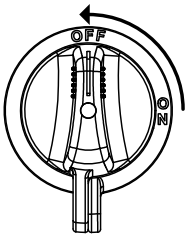

Figure 60. Battery Switch (OFF)

Parallel Operation Shutdown Procedure (Auto)

> ***NOTICE***
>
> During parallel operation in Auto mode, the Circuit Breaker ON button and Circuit Breaker OFF button are disabled.

1. Place the load's ON/OFF switch in the **OFF** position.
2. Press the **OFF button** on the digital controller (Figure 58) on each generator in the paralleled system. Each circuit breaker will automatically turn **OFF** and each engine will stop after a 1-minute cool-down process.
3. On each generator, after the engine has completely stopped, place the **Control Power switch** in the **OFF** position (Figure 59) and place the **Battery switch** (Figure 60) in the **OFF** position.

> ***NOTICE***
>
> Remove the ethernet cables when the generators are not in parallel operation.

	Table 12. Inspection/Maintenance	Daily	Every 250 Hours	Every 500 Hours	Every 1,000 Hours	Other
Engine	Check Engine Oil and Coolant Levels	X				
	Check Fuel Filter/Water Separator Bowl	X				
	Check Battery Fluid Level	X				
	Check Air Cleaner	X				
	Check for Leaks	X				
	Visual Walk Around Inspection	X				
	Clean Air Cleaner Element		X			
	Drain Bottom of Fuel Tank		X			
	Replace Engine Oil and Oil Filter*1		(X)	X		
	Replace Fuel Filter Elements		(X)	X		
	Check Fan Belt Condition	X		X		
	Check Electrical Ground Connection			X		
	Clean Radiator and Check Cooling System			X		
	Check and Adjust Engine Valve Clearance				X	
	Clean Inside Fuel Tank				X	
	Check All Hoses and Clamps*4				X	
	Check Engine Mounts				X	
	Replace Air Cleaner Elements*5				X	
	Inspect Air Filter Case for Damage, Replace If Necessary					1,500 hours
	Check/Correct DEF Leakage	X				
	Replace DEF Filter (in Supply Module)				X	
	Check SCR System*2					4,500 hours
	Inspect Dosing Module (SCR System)*2					4,500 hours
	Flush and Refill Cooling System*3					1 year or 2,000 hours
	Inspect Turbocharger					4,500 hours (blower cleaning as necessary)
	Inpsect and Clean EGR Valve and Cooler					4,500 hours
Generator	Measure Insulation Resistance Over 3M Ohms*6		X			
	Check Rotor Rear Support Bearing			X		
	Inspect Voltage Change-Over Board Bus Bars and Tie Bolts and Re-Torque Tie Bolts*7			X		

*1 During the initial operation of a new engine, change engine oil and filter between a minimum of 100 hours and a maximum of 250 hours. The service interval depends on the type of engine oil.

*2 Perform inspection and maintenance of DEF in the SCR system every 4,500 hours. The system does not need to be replaced/exchanged if no problem is detected. DO NOT make any modification or changes, or remove the emission control system's related parts. Contact your nearest Isuzu distributor or Multiquip Inc. for SCR maintenance.

*3 Use fully formulated antifreeze/coolant.

*4 If the blow-by hose needs to be replaced, make sure that the slope of the blow-by hose is at least 1/2 inch per foot, with no sags or dips that could collect moisture and oil.

*5 Replace the air cleaner element when the restriction indicator shows a vacuum of 635 mm (25 in.) H_2O.

*6 Make sure to disconnect the O – Earth line and CN11 – CN12 before performing the measurement. Refer to the ***Generator Wiring Diagram***.

*7 Torque bolts to 554.9 lbf·in (62.7 N·m).

GENERAL INSPECTION

Prior to each use, the generator should be cleaned and inspected for deficiencies. Check for loose, missing or damaged nuts, bolts, or other fasteners. Also check for fuel, oil, and coolant leaks. Use Table 12 as a general inspection and maintenance guideline. For more detailed engine maintenance instructions, refer to the engine owner's manual.

ENGINE AIR CLEANER

This Isuzu diesel engine is equipped with a replaceable, high-density, paper air cleaner element (Figure 61). The air cleaner is also equipped with an inner (secondary) element that is used as a backup filter should the primary element become damaged. Check the air cleaner daily or before starting the engine. Replace the air cleaner as needed.

NOTICE

If the engine is operating in very dusty or dry grass conditions, a clogged air cleaner will result. This can lead to a loss of power, excessive carbon buildup in the combustion chamber, and high fuel consumption. Change the air cleaner more frequently if these conditions exist.

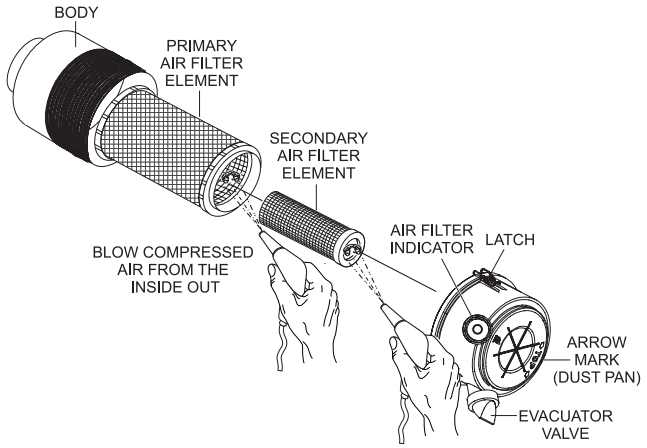

Figure 61. Engine Air Cleaner

Primary And Secondary Air Cleaner Elements

Every 250 hours: Remove the air cleaner elements and clean them with a light spray of compressed air.

CAUTION

Wear protective equipment such as approved safety glasses or face shields and dust masks or respirators when cleaning air filters with compressed air.

1. Release the latches that secure the cover to the air cleaner body (Figure 61).
2. Remove the **air cleaner cover** (Figure 61) and set it aside.
3. Remove both the primary and secondary air cleaner elements (Figure 61).
4. Check for and correct heavy buildup of dirt and debris along with loose or damaged components.

NOTICE

Operating the engine with loose or damaged air cleaner components could allow unfiltered air into the engine causing premature wear and failure.

5. To clean the **primary element** (paper air filter) as shown in Figure 61, tap the filter element several times on a hard surface to remove dirt, or blow compressed air, not to exceed 30 psi (207 kPa, 2.1 kgf/cm^2), through the filter element from the inside out.
6. Clean the **secondary element** (paper air filter) as described in step 5.
7. Replace both elements if they are damaged or excessively dirty.
8. Clean the inside of the **air cleaner body** (Figure 61).
9. Reinstall the primary and secondary air filter elements back into the air cleaner body.
10. Reinstall the air cleaner cover and secure with latches.

NOTICE

DO NOT run the engine with the air cleaner removed or without an element.

Air Cleaner Restriction Indicator

The air cleaner is equipped with a **restriction indicator** (Figure 62). As the air cleaner element becomes clogged, air intake restriction increases and the indicator signal shows **RED**, indicating that the element needs to be replaced. After replacing the air cleaner element, press the restriction indicator button to reset the indicator.

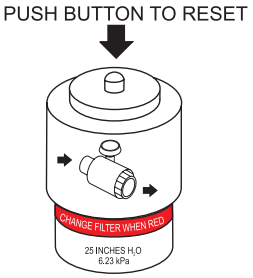

Figure 62. Air Cleaner Restriction Indicator

> ***NOTICE***
>
> The air cleaner element should not be changed until the indicator displays **RED**. Dispose of the old element. It cannot be cleaned or reused.

ENGINE FUEL FILTER

Inspect the **engine fuel filter** daily. If the fuel filter has collected a significant amount of water and sediment at the bottom of the cup, it should be drained off immediately.

Draining The Fuel Filter

1. Loosen the **air bleeder plug** (Figure 63) on the fuel filter body.

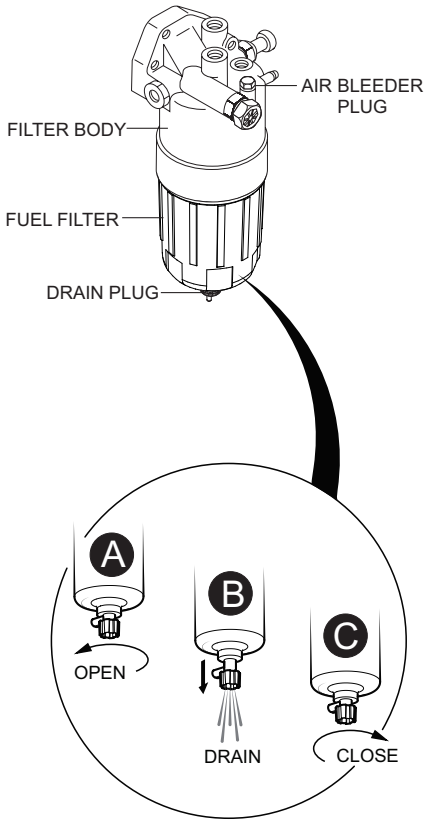

Figure 63. Draining The Fuel Filter

2. To discharge the fuel inside the fuel filter cartridge, open the **drain valve** on the fuel filter by turning the knob **counterclockwise** (Figure 63**A**) approximately 3-1/2 turns until the valve drops down 1 inch (25.4 mm) and draining occurs (Figure 63**B**).
3. Let the residue or foreign substances inside the fuel filter flow into a suitable container.
4. At completion of draining, close the drain valve (Figure 63**C**).

Fuel Filter Element Replacement

1. Using a **filter wrench**, remove the **element case** from the **fuel filter body** (Figure 64).

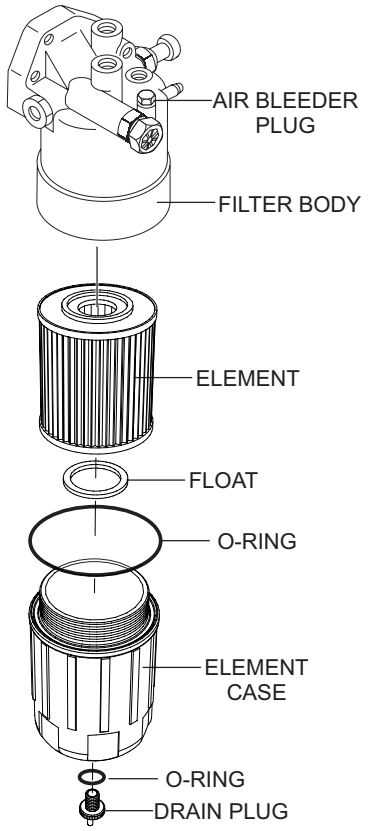

Figure 64. Fuel Filter Replacement

2. Wipe the inside of the **filter body** (Figure 64) with a clean cloth to remove any foreign matter or debris that may have accumulated.
3. Insert the new fuel filter element into the element case.
4. Replace both **O-rings**. Coat each O-ring with a small amount of clean 15W-40 engine oil.
5. Reinstall the element case first by hand until it makes contact with the fuel filter body surface.
6. Torque the element case to 22.4 lbf·ft (30 N·m).
7. Torque the drain plug to 1.4 lbf·ft (2.0 N·m).
8. Remove the air from the fuel system. Refer to ***Bleeding the Fuel System*** in the Isuzu engine owner's manual.

REMOVING WATER FROM THE FUEL TANK

After prolonged use, water and other impurities accumulate in the bottom of the fuel tank. Occasionally inspect the fuel tank for water contamination and drain the contents if required.

During cold weather, the more empty volume inside the tank, the easier it is for water to condense. This can be reduced by keeping the tank full with diesel fuel.

CLEANING INSIDE THE FUEL TANK

If necessary, drain the fuel inside the fuel tank completely. Using a **spray washer** (Figure 65), wash out any deposits or debris that have accumulated inside the fuel tank.

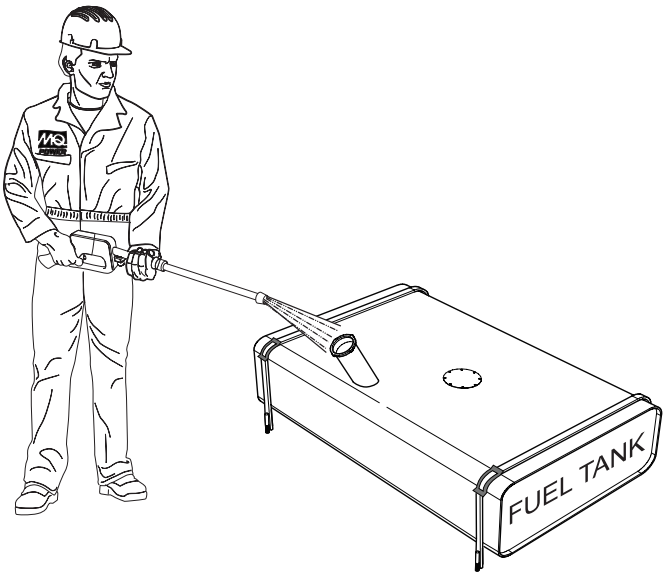

Figure 65. Cleaning The Fuel Tank

FUEL TANK INSPECTION

In addition to cleaning the fuel tank, inspect the following components for wear:

- **Rubber Suspension** — Look for signs of wear or deformity due to contact with oil. Replace the rubber suspension if necessary.
- **Fuel Hoses** — Inspect nylon and rubber hoses for signs of wear, deterioration or hardening.
- **Fuel Tank Lining** — Inspect the fuel tank lining for signs of excessive amounts of oil or other foreign matter.

DRAINING THE ENGINE OIL

1. Run the engine until the engine coolant reaches a temperature of 140°F (60°C).
2. Turn the engine **OFF**.
3. Remove the oil dipstick from its holder.
4. Remove the **oil drain cap** (Figure 66).

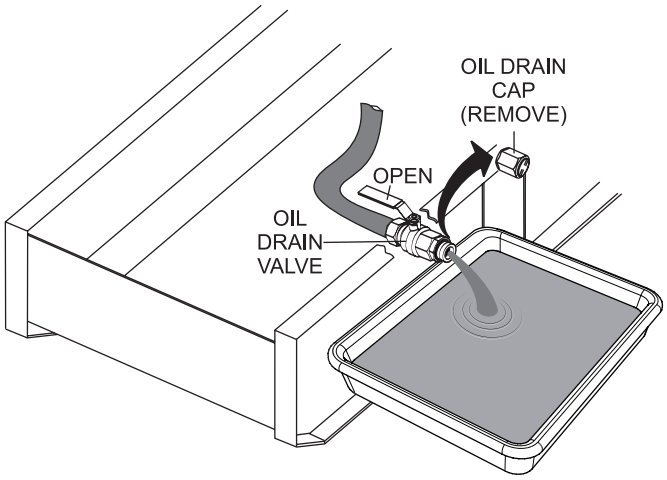

Figure 66. Draining The Engine Oil

5. Place the **oil drain valve** in the open position (Figure 66) and allow the oil to drain into a suitable container.
6. After the engine oil has completely drained, reinstall the oil drain cap and tighten securely.
7. Place the oil drain valve in the closed position.

ENGINE OIL FILTER REPLACEMENT

> ***NOTICE***
>
> Filter head appearance may vary.

1. Clean the area around the **oil filter head** (Figure 67).

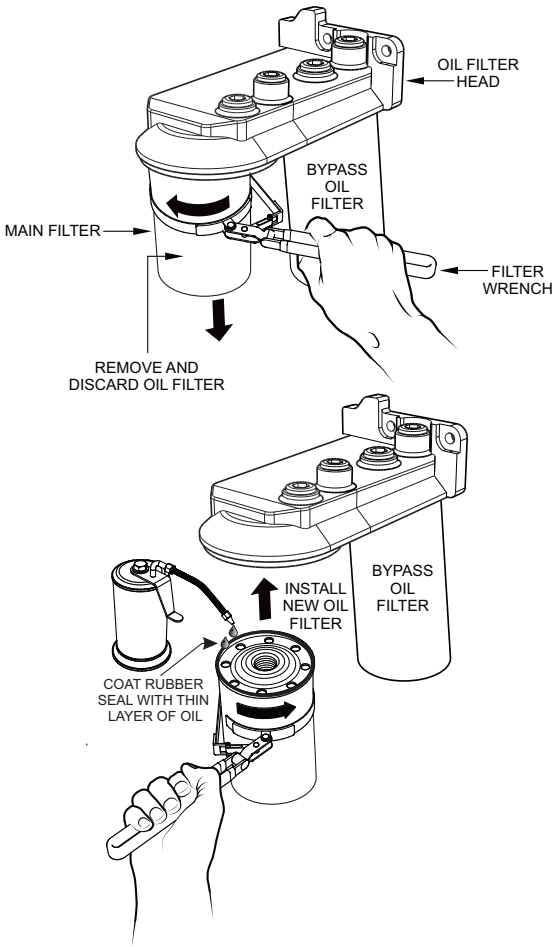

Figure 67. Engine Oil Filter Replacement

2. Using an **oil filter wrench**, remove the **engine oil filter** (Figure 67).
3. Coat the rubber seal (gasket) surface of the new oil filter with clean 15W-40 engine oil (Figure 67).
4. Install the new oil filter (main) first by hand until it makes contact with the filter head surface. Tighten it another 3/4 turn using a filter wrench.
5. Fill the engine crankcase with high-quality detergent oil classified “For Service CI-4.” Fill to the upper limit of the dipstick. **DO NOT** overfill. Refer to Table 2 for engine oil capacity.

6. Run the engine for several minutes. Watch for oil leakage. Shut the engine down and allow it to sit for several minutes. Top off the oil to the upper limit on the dipstick.
7. Repeat this procedure for the **bypass oil filter**.

DRAINING THE ENGINE COOLANT

WARNING

DO NOT remove the pressure cap from the radiator when the engine is hot! Wait until the coolant temperature is below 120°F (50°C) before removing the pressure cap.

Heated coolant spray or steam can cause severe scalding and personal injury.

1. Remove the **radiator pressure cap** (Figure 68) only when the coolant temperature is below 120°F (50°C).

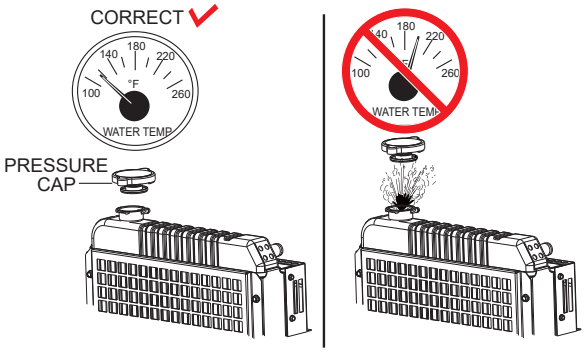

Figure 68. Radiator Pressure Cap Removal

2. Place the **coolant drain valve** in the **OPEN** position (Figure 69) and allow the coolant to drain into a suitable container.

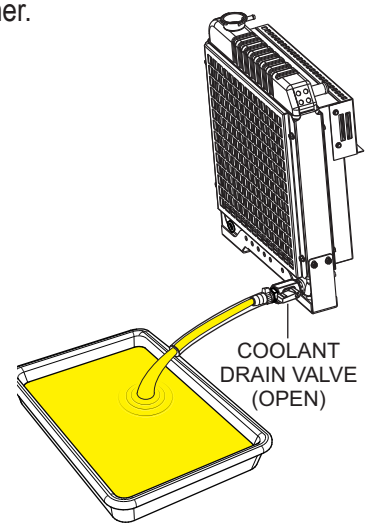

Figure 69. Draining The Engine Coolant

3. After the coolant has completely drained, place the coolant drain valve in the **CLOSED** position.
4. Reinstall the radiator pressure cap and tighten securely.
5. Flush out the radiator and replace the coolant. Refer to ***Cleaning the Coolant Passages*** and ***Filling the Coolant System*** in the Isuzu engine owner's manual.

CLEANING THE RADIATOR

The radiator (Figure 70) should be sprayed (cleaned) with a high-pressure washer when excessive amounts of dirt and debris have accumulated on the cooling fins or tube. When using a high-pressure washer, stand at least 5 feet (1.5 meters) away from the radiator to prevent damage to the fins and tube.

NOTICE

It may be necessary to remove additional generator components in order to access the radiator for cleaning.

Figure 70. Cleaning The Radiator

DRIVE BELT

Drive Belt Tension

A slack drive belt may contribute to overheating or insufficient charging of the battery. Adjust the drive belt in accordance with the Isuzu engine owner's manual.

Drive Belt Inspection

Inspect the **drive belt** (Figure 71) for damage and wear. Horizontal cracks (across the belt) are acceptable. Vertical cracks (direction of belt ribs) that intersect with horizontal cracks are not acceptable.

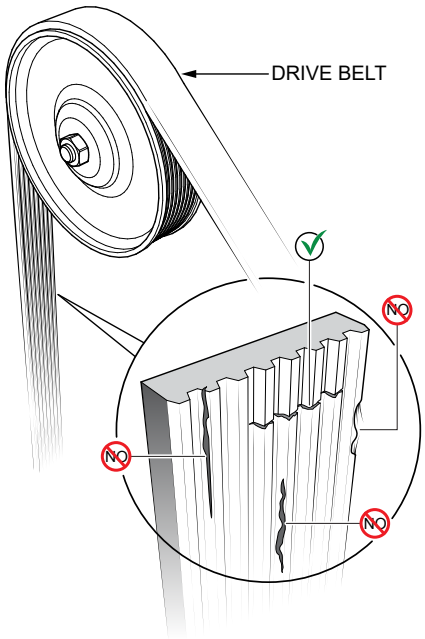

Figure 71. Drive Belt Inspection

Also, examine the belt and determine if it is **oil soaked** or **glazed** (a hard shiny appearance on the sides of the belt). Either of these two conditions can cause the belt to run hot, which can weaken it and increase the danger of it breaking.

If the drive belt exhibits any of the above wear conditions, replace the drive belt immediately.

TESTING THE GFCI RECEPTACLE

NOTICE

The GFCI receptacle is designed to interrupt power when a ground fault exists to prevent injuries and shock hazards. **DO NOT** use the GFCI receptacle if the test below fails. Consult a qualified electrician for repair or replacement of the GFCI receptacle. Test the GFCI receptacle **at least once a month**.

1. Start the generator as outlined in the start-up procedure in this manual.
2. Place a **GFCI circuit breaker** (Figure 72) in the **ON** position.

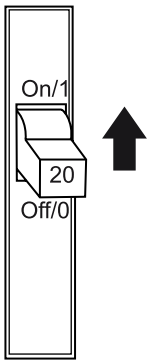

Figure 72. GFCI Circuit Breaker

3. Verify that the **status LED** on the corresponding GFCI receptacle (Figure 73) is **ON (GREEN)**.

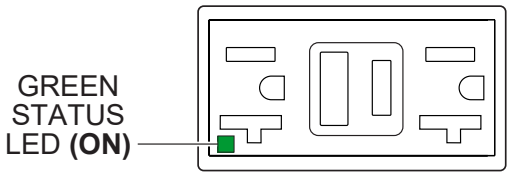

Figure 73. GFCI Receptacle (ON)

4. Press the **TEST** button (Figure 74) on the GFCI receptacle and verify that the status LED turns **OFF**.

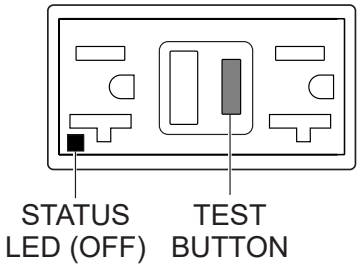

Figure 74. GFCI Receptacle (OFF)

5. Press the **RESET** button (Figure 75) to restore power to the GFCI receptacle and verify that the status LED is **ON (GREEN)**.

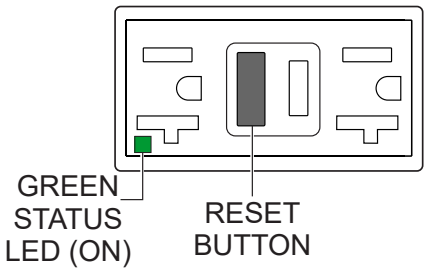

Figure 75. GFCI Receptacle (ON/Restore)

6. If the **status LED** (Figure 76) is **flashing (RED)**, **DO NOT** use the GFCI receptacle. Replace it immediately.

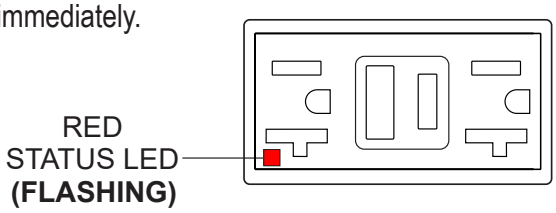

Figure 76. GFCI Receptacle (Red Flashing LED)

7. Repeat the above procedure for all other GFCI receptacles.

GENERATOR STORAGE

For long-term storage of the generator the following is recommended:

- Drain the fuel tank completely. Treat with a fuel stabilizer if necessary.
- Completely drain the oil from the crankcase and refill if necessary with fresh oil.
- Clean the entire generator, internal and external.
- Disconnect the battery.
- Make sure engine coolant is at the proper level.
- Cover the generator and store it in a clean, dry place.
- If the generator is mounted on a trailer, jack the trailer up and place it on blocks so the tires do not touch the ground, or block and completely remove the tires.

OPTIONAL ENGINE BLOCK HEATER AND INTERNAL BATTERY CHARGER 120 VAC INPUT RECEPTACLES

An **engine block heater** and an **internal battery charger** are available as **options**. They are provided with electrical cords to connect to a commercial power source.

The engine block heater and internal battery charger (Figure 77) both require 120 VAC in order to operate. Two power receptacles are provided on the output terminal panel to allow commercial power to be applied.

These units will **ONLY** function when commercial power has been supplied to them. When using extension cords, refer to Table 6 for the correct size and length.

When using the generator in hot climates there is no reason to apply power to the engine block heater. However, if the generator will be used in cold climates it is always a good idea to apply power to the heater at all times.

If the generator will be used daily, the battery should normally not require charging. If the generator will be idle (not used) for long periods of time, apply power to the battery charger receptacle via commercial power using a power cord of adequate size.

NOTICE

If the generator will be idle (not used) for long periods of time, **ALWAYS** keep power supplied to the generator's internal battery charger to ensure adequate starting capability.

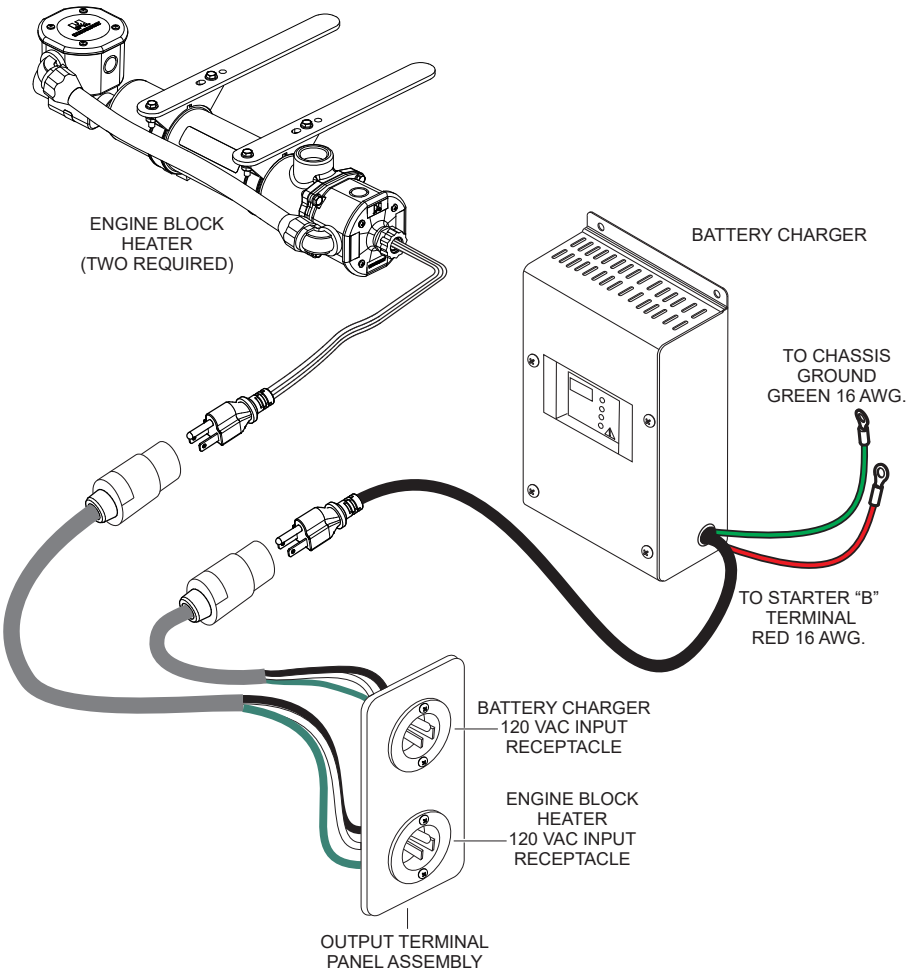

Figure 77. Engine Block Heater And Battery Charger (Options)

EMISSION CONTROL

The emission control system employed with this diesel engine consists of a **diesel oxidation catalyst (DOC)** and a **selective catalytic reduction (SCR)** catalyst as an exhaust gas after-treatment system that helps reduce harmful gases and destroy the organic fraction of particulate matter produced from the exhaust gas to meet the requirement for EPA Tier 4 (Final) regulations.

The DOC device (Figure 78) helps filter out large amounts of harmful nitrogen oxides (NO_X) and particulate matter (PM) which are emitted by diesel engines. These exhaust emissions pose serious environmental and health risks. It is important to maintain and service the DOC emission safety device on a periodic basis.

Diesel Oxidation Catalyst (DOC)

The DOC does not filter particles; it oxidizes them. This catalyst (honeycomb-like structure) uses a chemical process to break down pollutants in the exhaust stream into less harmful components. In general this catalyst collects/burns accumulated particulates. The DOC contains palladium and platinum which serve as catalysts to oxidize hydrocarbons and carbon monoxide.

PREVENTIVE MAINTENANCE PROGRAMS

Most challenging to a rental organization is the fact that a customer's power assumptions may not meet the minimum load requirements of the power equipment selected. When in doubt, it is always recommended to apply a **load bank application** to the equipment following a longer rental period.

Equipment on extended, long-term contracts needs periodic on-site inspection. If possible, interview the operator and survey the equipment hooked up to the generator to estimate load conditions.

Preventive maintenance and a few extra steps prevent downtime and protect your investment and business. A well-planned preventive maintenance program will reward you with years of service.

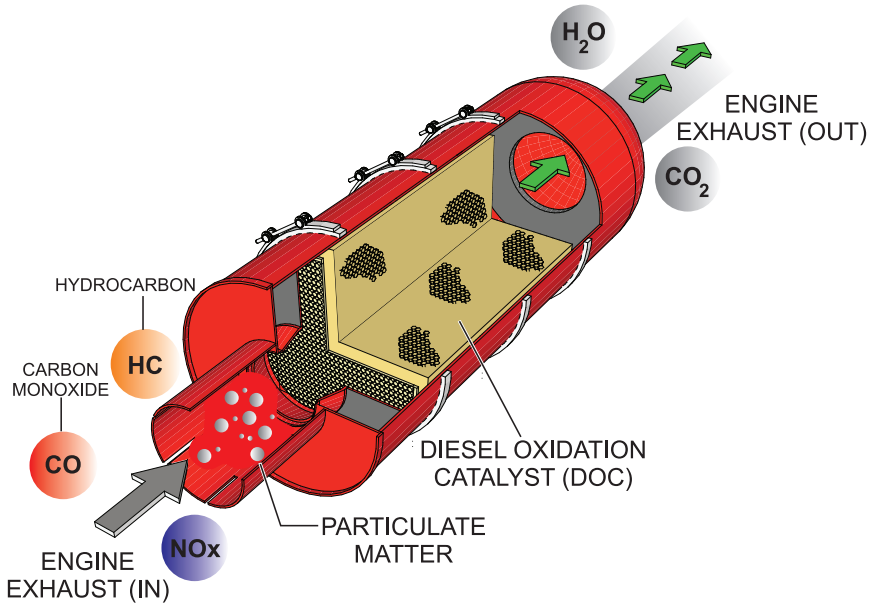

Figure 78. Diesel Oxidation Catalyst (DOC)

SELECTIVE CATALYTIC REDUCTION (SCR)

Diesel engines can be run with a lean burn air-to-fuel ratio, to ensure the full combustion of soot and to prevent the exhaust of unburnt fuel. The excess of air necessarily leads to generation of nitrogen oxides (NO_X), which are harmful pollutants, from the nitrogen in the air. **Selective catalytic reduction (SCR)** is used to reduce the amount of NO_X released into the atmosphere.

Diesel exhaust fluid (DEF) is injected from a separate tank into the exhaust pipeline, where the aqueous urea solution vaporizes and decomposes to form ammonia and carbon dioxide. Within the SCR catalyst, the nitrogen oxides are catalytically reduced by the ammonia (NH_3) into water (H_2O) and nitrogen (N_2), which are both harmless; these are then released through the exhaust.

The SCR system creates a certain amount of ammonia (NH_3) that is stored within the SCR catalyst. During purge operations the increase in temperature at regular intervals eliminates the stored ammonia.

The process of keeping accurate ammonia storage amounts is by counting urea injection quantities from the **dosing control unit (DCU)**.

During either Automatic or Forced Purge operation, the **Alarm lamp** on the digital controller will start **flashing (red)**, and a message will appear on the controller display next to the **SCR Purge symbol**. See Figure 79.

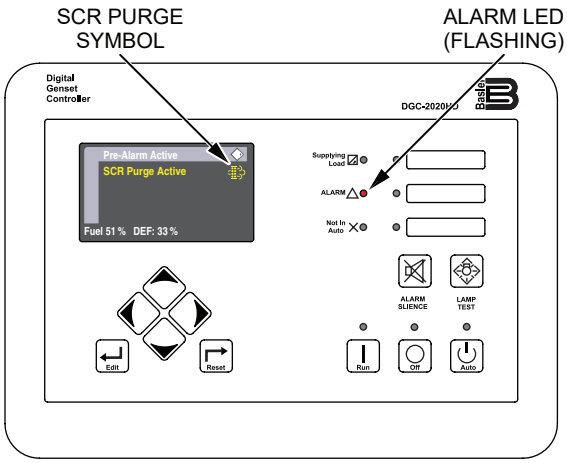

Figure 79. Digital Controller (SCR Purge)

Refer to Table 13 for digital controller messages displayed during SCR Purge operation.

Table 13. SCR Purge Controller Messages

SCR Purge Type	Automatic Purge	Forced Purge
Controller Message	SCR Purge Active	SCR Forced Purge Active PA
SCR Purge Indicator		
Alarm Lamp	FLASHING	FLASHING

System Purging Guidelines

For the safe operation of equipment, protection of the surrounding area, and prevention of bodily harm, use the guidelines below when a purge operation is required:

- **DO NOT** perform purge operations in conditions where it may be unsafe due to high exhaust temperatures.
- **DO NOT** operate the unit in an area with poor ventilation.
- If operating the engine indoors, install exhaust/ventilation equipment and ensure that there is sufficient ventilation.
- If you begin to feel sick, stop the unit immediately and ventilate the area.
- **Remember** — Due to the emission reduction functions of the exhaust system, exhaust emissions from the tailpipe have a different smell than those emitted from engines without urea SCR systems.
- During the purge operation, the area above and around the generator should be free of any type of debris or flammable/combustible materials, as temperatures during the purge process can reach as high as 1,022°F (550°C).
- If a purge operation is performed while the unit is operating under a light load (0–30%), unusual sounds may be produced. This should not be considered a problem.
- During SCR purge operations, white smoke may be temporarily emitted from the exhaust tailpipe. This shoud not be considered a failure. In addition, the smell of ammonia during the purge process should not be considered a failure.

Automatic Purge Operation

The purging operation is automatically performed every 30 hours. The **Alarm lamp** will begin flashing (red) and the message **"SCR Purge Active"** will appear on the controller screen (Figure 79) while the purge operation is in progress.

Forced Purge Operation

NOTICE

Only a qualified service technician with proper training should perform a Forced Purge operation.

If the Automatic Purge operation is interrupted by an engine shutdown or otherwise cannot be completed, the message **"SCR Forced Purge Req"** will be displayed on the digital controller (Figure 80). When this occurs, a Forced Purge operation must be performed by a trained service technician utilizing the Isuzu Diagnostic Service Tool (IDST).

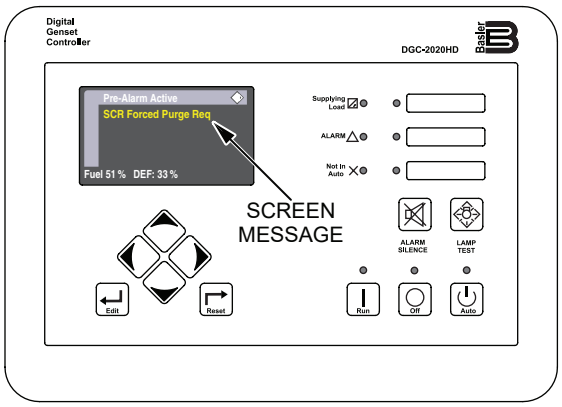

Figure 80. Digital Controller (Forced Purge Request)

While a Forced Purge operation is in progress, the **Alarm lamp** will begin flashing (red) and the message **"SCR Forced Purge Active"** will appear on the controller screen (Figure 81).

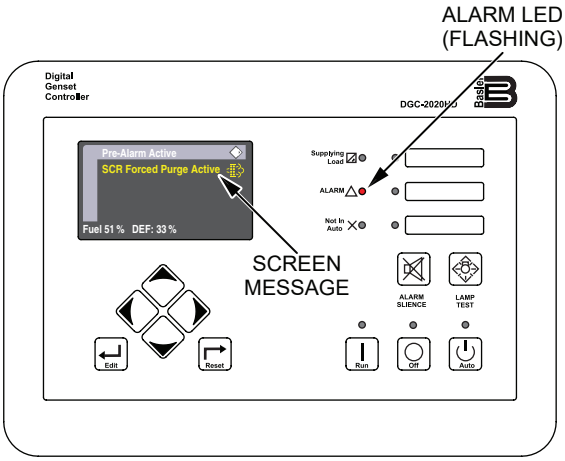

Figure 81. Digital Controller (Forced Purge Active)

If the Forced Purge operation is interrupted by an engine shutdown, it will not be completed automatically when the engine fault is cleared and the engine is restarted. The Forced Purge operation must still be performed manually by a trained service technician using the IDST.

DIESEL EXHAUST FLUID (DEF)

The red Alarm lamp will turn on or begin flashing and the **Diesel Exhaust Fluid (DEF) indicator** (Figure 82) will be displayed next to a diagnostic message on the digital controller during either of the following operating conditions:

- DEF tank level is below 10%. Refer to Table 14, DEF Level System Action.
- DEF quality is poor. Check the DEF tank level and check active **diagnostic trouble codes (DTC)**.

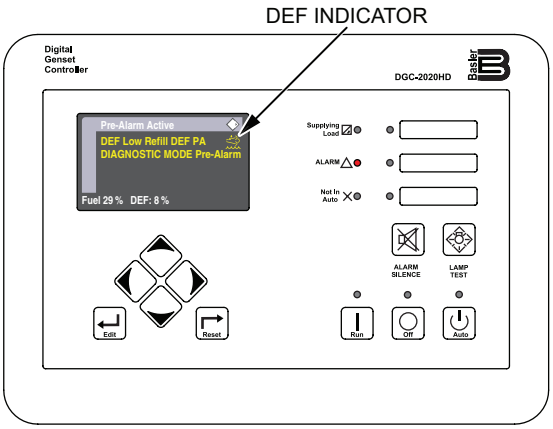

Figure 82. Digital Controller (DEF Indicator)

> ***NOTICE***
>
> The unit will enter emergency shutdown when the DEF level has reached 0% and emergency protective measures are necessary. When this condition exists, the unit can only be restarted after **Escape mode** is activated and the unit will run for 30 minutes. Refer to ***How to Activate Escape Mode*** in the ***Maintenance*** section.

The amount of fluid in the DEF tank will be displayed on the digital controller during operation (Figure 83).

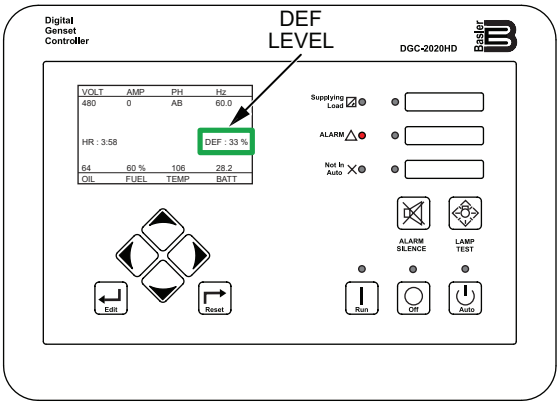

Figure 83. DEF Level Gauge

Table 14. DEF Level System Action

DEF Level	Over 10%	Below 10%	Below 5%	0%
Controller Message	—	—	DEF Presvr Inducmt (Pre-Alarm Screen)	DEF Severe Inducmt (Alarm Screen)
SCR System Pop-Up	—	DEF Low Refill DEF (Pre-Alarm Screen)	DEF Low Refill DEF (Pre-Alarm Screen)	DEF Low Refill DEF (Alarm Screen)
DEF Indicator	—	ON	ON	ON
Alarm Lamp	—	Flashing	Flashing	ON

INDUCEMENT

When the system senses improper usage such as no supply of DEF, use of poor quality DEF, problems with DEF dosing, or disconnection of sensors, a warning will be issued before the situation becomes critical. If the warnings are ignored and the unit enters intermittent operation, the emergency shutdown will activate. The three warning levels are shown in Table 15:

NOTICE

Replace the DEF filter (located in the urea SCR system supply module) every 1,000 hours of operation. Refer to the ***Replacement of DEF Filter*** section in the Isuzu engine owner's manual.

Table 15. DEF Inducement

Stage	Controller Message	SCR System Pop-Up	DEF Indicator	Pre-Alarm Lamp	Shutdown Lamp
Stage 1 Warning Level 1	—	EXH System Error PA (Pre-Alarm Screen)		Flashing	—
Stage 2 Warning Level 2	DEF Presvr Inducmt A (Pre-Alarm Screen)	EXH System Error PA (Pre-Alarm Screen)		Flashing	—
Stage 3 Shutdown[1]	DEF Severe Inducmt A (Alarm Screen)	EXH System Error A (Alarm Screen)		ON	ON

ESCAPE MODE

When emergency shutdown occurs, inspection and repair should generally be performed promptly. However, if emergency protective measures are necessary which require the unit to be running, the engine can be started in **Escape mode**, which allows the unit to run for 30 minutes.

Escape Mode Activation

Confirm the message displayed on the digital controller. Escape mode can only be activated if one of the error messages shown in Table 15 is displayed.

1. Start **Diagnostic mode** as described in the ***Troubleshooting (Diagnostics)*** section of this manual.
2. Use the **Arrow buttons** (Figure 87) to navigate to the **Escape Mode Request menu**: (Settings->Communication->CAN Bus2(ECU) Setup->ECU Setup->General Settings->Escape Mode Request).
3. Use the Arrow buttons to enter the username and password.

> ***NOTICE***
>
> The username and password for the digital controller are initially set to defaults which can be found in the Basler DGC-2020HD instruction manual.

4. After the Escape Mode Request changes from **OFF** to **ON**, press the **Edit button** (Figure 84).

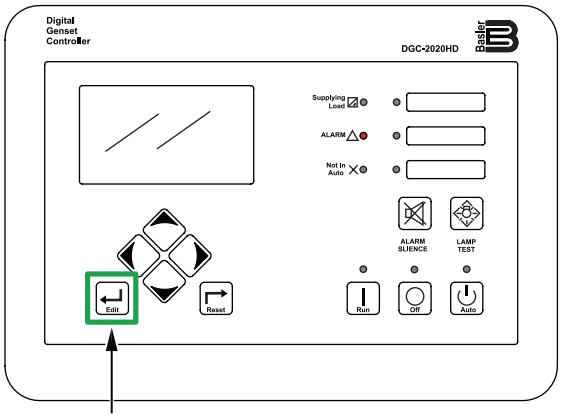

Figure 84. Digital Controller (Edit Button)

5. When Escape mode is enabled, the **Alarm lamp** will flash and the message **"Escape Mode PA"** will appear on the Pre-Alarm screen.
6. Press the **Run button** (Figure 85) to start the engine.

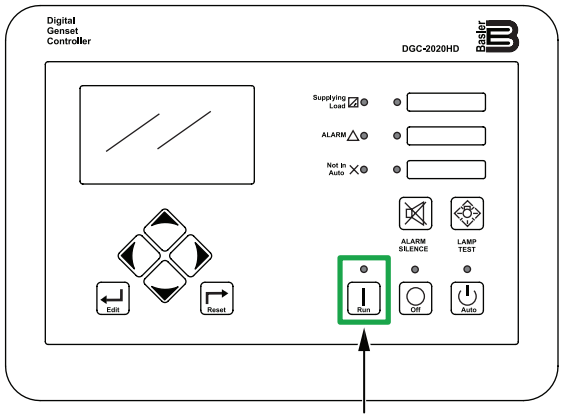

Figure 85. Digital Controller (Run Button)

7. The **Escape Mode Timer** will appear on the digital controller display. This timer indicates the remaining Escape mode operation time.

- Escape mode operation will be available until around 30 minutes after operation has been stopped. If Escape mode is temporarily suspended before the end of the 30-minute period, it is not necessary to request Escape mode again when the unit is restarted. The 30-minute countdown from before the last shutdown will resume automatically once the unit is restarted.
- Once time expires on the 30-minute Escape Mode timer, the engine will stop automatically. Please perform maintenance to return the unit to proper operating condition.
- If the unit returns to Warning Level 1 while Escape mode is running, Escape mode will be cancelled, the Escape Mode timer display will close, and normal operation will resume.

DIAGNOSTIC MODE

The digital controller can be placed in **Diagnostic mode**, which will keep the key switch on for service tool purposes. To place the unit in Diagnostic mode the engine must be turned **OFF**.

1. Press the **Alarm Silence button** and the **Lamp Test button** (Figure 86) simultaneously for 5 seconds.

> ***NOTICE***
>
> When diagnostic mode is enabled, the message **"DIAGNOSTIC MODE Pre-Alarm"** will be displayed on the Pre-Alarm screen.

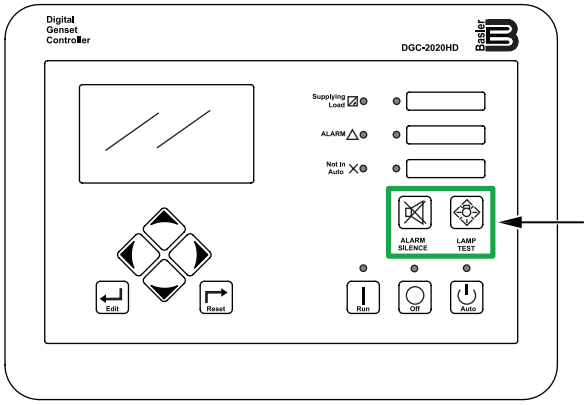

Figure 86. Digital Controller (Alarm Silence And Lamp Test Buttons)

2. Use the **Arrow buttons** (Figure 87) to navigate to the **J1939 ECU menu** (Metering->J1939 ECU). This will allow the operator to perform the following diagnostics:

- **DTC Active Data** — Displays active fault messages and codes.
- **DTC Previous Data** — Displays messages and codes which previously occurred that are recorded in the engine control module (ECM).

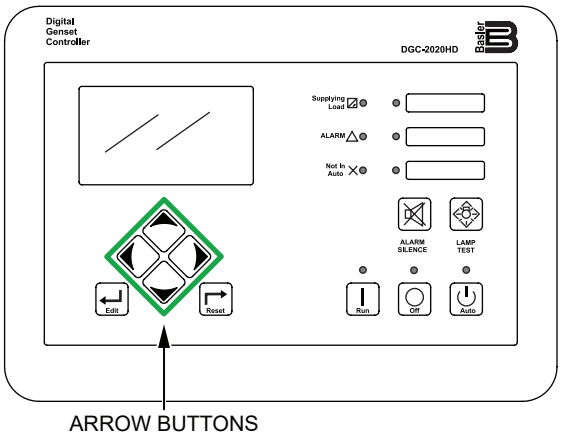

Figure 87. Digital Controller (Arrow Buttons)

3. After performing the diagnostic test, press the **Reset button** on the digital controller to exit Diagnostic mode.

PROTECTION DEVICES

Automatic Shutdown System

This generator is equipped with engine protection devices that will automatically shut down the engine and provide a warning to the operator when a fault occurs. Table 16 contains a complete list of engine protection devices and fault codes.

When a fault is detected, the **Alarm lamp** on the digital controller will illuminate and/or begin flashing **(red)**, and an alarm message will appear on the controller display. When this occurs, press the **Off button** on the digital controller to shut down the engine. Allow a sufficient cooling period, then inspect the unit and repair the problem before restarting operation. If necessary, contact your nearest MQ Power dealer for additional technical support.

When the unit is ready to restart, press the **Off button** on the digital controller. The **Off button LED** (Figure 88) will turn **ON (red)**.

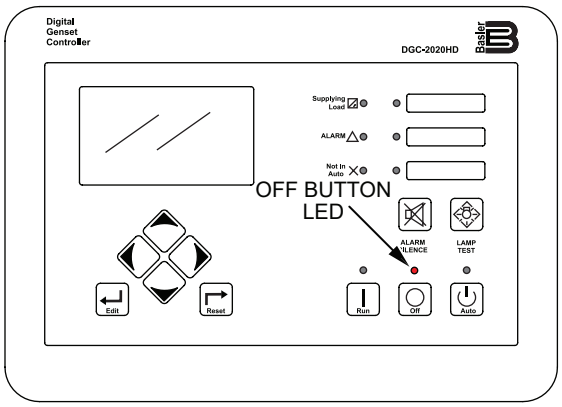

Figure 88. Digital Controller (Off Button LED)

Make sure all fault messages have been cleared from the digital controller display, then restart the generator as shown in the ***Generator Start-Up Procedure (Manual)*** section.

NOTICE

Although the unit is equipped with engine protection devices, regularly scheduled preventive maintenance is strongly advised. Refer to Table 12.

Table 16. Automatic Engine Shutdown System				
Operating Parameter	**Circuit Breaker Off LED**	**ECU Shutdown LED**	**Digital Controller Display Message**	**Operating Condition/ Set Point**
Under Voltage	—	—	27P-1 UndVolt Prealarm	When under voltage occurs
Under Voltage	ON	ON	27P-2 UndVolt Alarm	When over voltage occurs
Over Voltage	—	—	59P-3 OvrVolt Prealarm	When over voltage occurs
Over Voltage	ON	ON	59P-4 OvrVolt Alarm	When under voltage occurs
Under Frequency	—	—	81-2 UndFreq Prealarm	Set point: 56 Hz
Under Frequency	ON	ON	81-2 UndFreq Alarm	Set point: 54 Hz
Over Frequency	—	—	81-3 OvrFreq Prealarm	Set point: 64 Hz
Over Frequency	ON	ON	81-4 OvrFreq Alarm	Set point: 66 Hz
Over Current	—	—	51-1,3 OvrCurr Alarm	When overcurrent occurs
Over Current	ON	Stops engine after 1-minute cooldown	51-2,4,5,6 OvrCurr Alarm	When overcurrent occurs
Over Reverse Power	—	—	32-1 Rvs Pwr Prealarm	Set point: –32 kW
Over Reverse Power	ON	Stops engine after 1-minute cooldown	32-2 Rvs Pwr Alarm	Set point: –48 kW
Over Power	—	—	32-3 kW Ovrld Alarm	Set point: 340 kW
Over Power	ON	Stops engine after 1-minute cooldown	32-4 kW Ovrld Alarm	Set point: 352 kW
Loss of Excitation	—	—	40Q-1 Exc Loss Alarm	When loss of excitation occurs
Loss of Excitation	ON	Stops engine after 1-minute cooldown	40Q-2 Exc Loss Alarm	When loss of excitation occurs
Battery Overvoltage	—	—	Batt Over Volt PreAlm	Set point: 30 V
Low Battery Voltage	—	—	Low Batt Volt PreAlm	Set point: 22 V
Weak Battery Voltage	—	—	Weak Battery PreAlm	Set point: 17 V
Low Fuel Level	—	—	Low Fuel PreAlarm	Set point: 15%
Low Fuel Level	ON	ON	Low Fuel Alarm	Set point: 10%
Low Oil Pressure	—	—	Low Oil Pres PreAlarm	Set point: 25 psi (172 kPa)
Low Oil Pressure	ON	ON	Low Oil Pressure Alarm	Set point: 7.0 psi (48 kPa)
High Coolant Temperature	—	—	High Coolant Temp PA	Set point: 200°F (93°C)
High Coolant Temperature	ON	ON	High Coolant Temp A	Set point: 212°F (100°C)
Over Speed	ON	ON	OverSpeed Alarm	Set point: 2,070 rpm

Practically all breakdowns can be prevented by proper handling and maintenance inspections, but in the event of a breakdown, use Table 17 shown below for diagnosis of the generator. If the problem cannot be remedied, consult our company's business office or service plant.

Table 17. Generator Troubleshooting

Symptom	Possible Problem	Solution
No Voltage Output	Loose wiring connection?	Check wiring and repair.
	Defective AVR?	Replace if necessary.
	Defective rotating rectifier?	Check and replace.
Low Voltage Output	Loose wiring connection?	Check wiring and repair.
	Defective AVR?	Replace if necessary.
High Voltage Output	Loose wiring connection?	Check wiring and repair.
	Defective AVR?	Replace if necessary.
Circuit Breaker Tripped	Short circuit in load?	Check load and repair.
	Over current?	Confirm load requirement and reduce.
	Defective circuit breaker?	Check and replace.

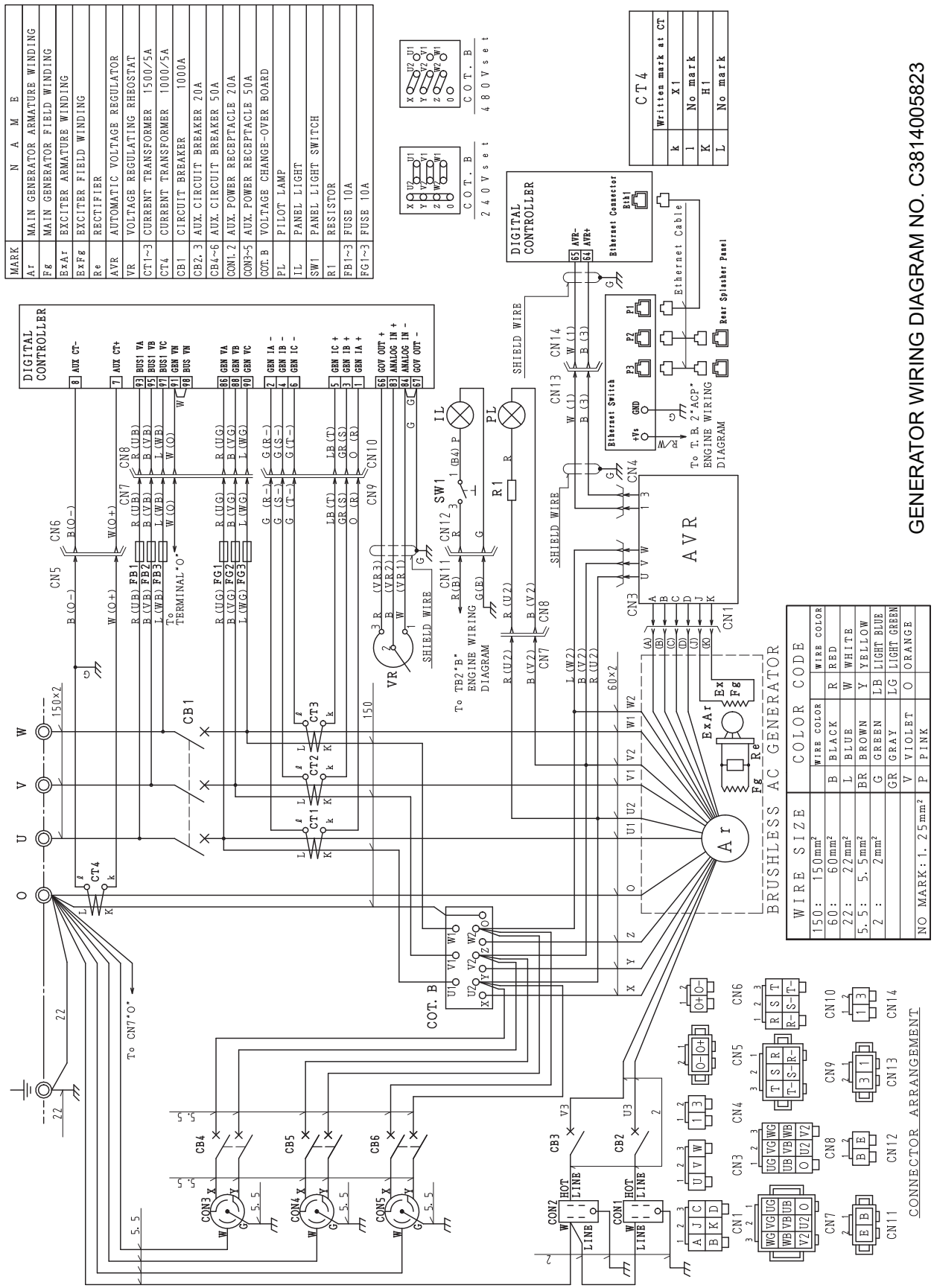
GENERATOR WIRING DIAGRAM NO. C3814005823
MARK | NAME
Ar | MAIN GENERATOR ARMATURE WINDING
Fg | MAIN GENERATOR FIELD WINDING
ExAr | EXCITER ARMATURE WINDING
ExFg | EXCITER FIELD WINDING
Re | RECTIFIER
AVR | AUTOMATIC VOLTAGE REGULATOR
VR | VOLTAGE REGULATING RHEOSTAT
CT1~3 | CURRENT TRANSFORMER 1500/5A
CT4 | CURRENT TRANSFORMER 1000/5A
CB1 | CIRCUIT BREAKER 1000A
CB2, 3 | AUX. CIRCUIT BREAKER 20A
CB4~6 | AUX. CIRCUIT BREAKER 50A
CON1, 2 | AUX. POWER RECEPTACLE 20A
CON3~5 | AUX. POWER RECEPTACLE 50A
COT. B | VOLTAGE CHANGE-OVER BOARD
PL | PILOT LAMP
IL | PANEL LIGHT
SW1 | PANEL LIGHT SWITCH
R1 | RESISTOR
FB1~3 | FUSE 10A
FG1~3 | FUSE 10A
CT4
Written mark at CT
k X1
l No mark
K H1
L No mark
DIGITAL CONTROLLER
Ethernet Connector
Ethernet Cable
Rear Splasher Panel
Ethernet Switch
To T.B. 2"ACP" ENGINE WIRING DIAGRAM
To TB2"B" ENGINE WIRING DIAGRAM
To TERMINAL"O"
To CN7"O"
SHIELD WIRE
AVR
BRUSHLESS AC GENERATOR
COT. B
240Vset
480Vset
WIRE SIZE
150: 150mm²
60: 60mm²
22: 22mm²
5.5: 5.5mm²
2 : 2mm²
NO MARK: 1.25mm²
COLOR CODE
WIRE COLOR
B BLACK
L BLUE
BR BROWN
G GREEN
GR GRAY
V VIOLET
P PINK
R RED
W WHITE
Y YELLOW
LB LIGHT BLUE
LG LIGHT GREEN
O ORANGE
CONNECTOR ARRANGEMENT

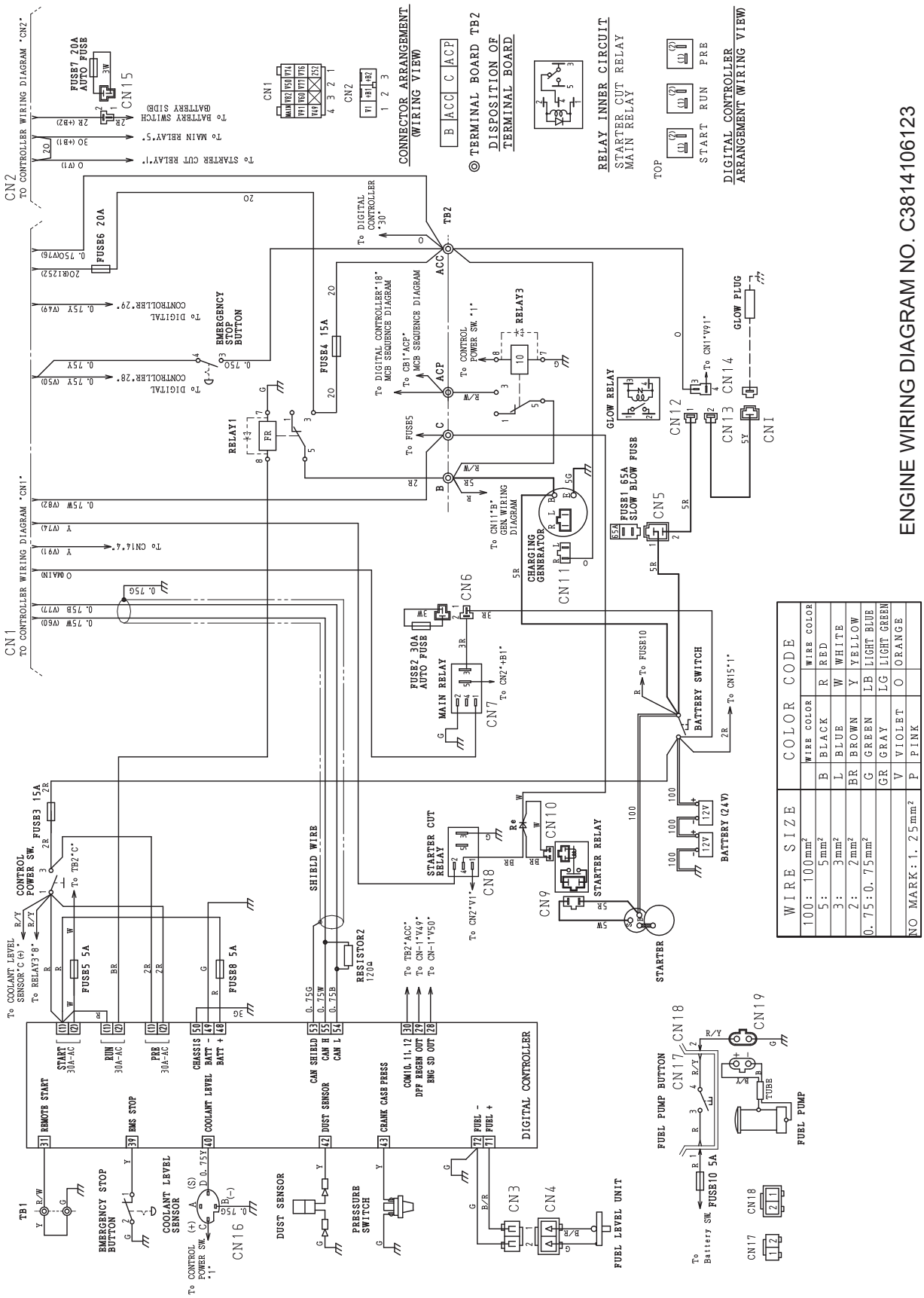
ENGINE WIRING DIAGRAM NO. C3814106123
CN1
TO CONTROLLER WIRING DIAGRAM "CN1"
CN2
TO CONTROLLER WIRING DIAGRAM "CN2"
CN15
FUSB7 20A AUTO FUSE
To BATTERY SWITCH (BATTERY SIDE)
To MAIN RELAY"5"
To STARTER CUT RELAY"1"
CONNECTOR ARRANGEMENT (WIRING VIEW)
TERMINAL BOARD TB2 DISPOSITION OF TERMINAL BOARD
B ACC C ACP
RELAY INNER CIRCUIT
STARTER CUT RELAY
MAIN RELAY
DIGITAL CONTROLLER ARRANGEMENT (WIRING VIEW)
START RUN PRE
FUSB6 20A
FUSB4 15A
EMERGENCY STOP BUTTON
To DIGITAL CONTROLLER"29"
To DIGITAL CONTROLLER"28"
To DIGITAL CONTROLLER"30"
To DIGITAL CONTROLLER"18" MCB SEQUENCE DIAGRAM
To CB1"ACP" MCB SEQUENCE DIAGRAM
To CONTROL POWER SW."1"
RELAY3
RELAY1
To FUSB5
To CN11"B" GEN WIRING DIAGRAM
CHARGING GENERATOR
GLOW RELAY
FUSE1 65A SLOW BLOW FUSB
GLOW PLUG
To CN1"V91"
To CN14"4"
FUSE2 30A AUTO FUSE
MAIN RELAY
To CN2"B1"
BATTERY SWITCH
To FUSB10
To CN15"1"
BATTERY (24V)
STARTER CUT RELAY
STARTER RELAY
STARTER
To CN2"V1"
To TB2"C"
CONTROL POWER SW.
FUSB3 15A
FUSB5 5A
FUSB8 5A
To COOLANT LEVEL SENSOR"C"(+)
To RELAY3"8"
SHIELD WIRE
RESISTOR2 120Ω
To TB2"ACC"
To CN-1"V49"
To CN-1"V50"
START 30A-AC
RUN 30A-AC
PRE 30A-AC
CHASSIS
BATT -
BATT +
CAN SHIELD
CAN H
CAN L
COM10. 11. 12
DPF REGEN OUT
EMG SD OUT
DIGITAL CONTROLLER
REMOTE START
EMS STOP
COOLANT LEVEL
DUST SENSOR
CRANK CASE PRESS
FUEL -
FUEL +
TB1
EMERGENCY STOP BUTTON
COOLANT LEVEL SENSOR
To CONTROL POWER SW."1"
DUST SENSOR
PRESSURE SWITCH
FUEL LEVEL UNIT
FUEL PUMP BUTTON
FUEL PUMP
FUSB10 5A
To Battery SW
WIRE SIZE
100: 100mm²
5: 5mm²
3: 3mm²
2: 2mm²
0.75: 0.75mm²
NO MARK: 1.25mm²
COLOR CODE
WIRE COLOR
B BLACK
L BLUE
BR BROWN
G GREEN
GR GRAY
V VIOLET
P PINK
R RED
W WHITE
Y YELLOW
LB LIGHT BLUE
LG LIGHT GREEN
O ORANGE

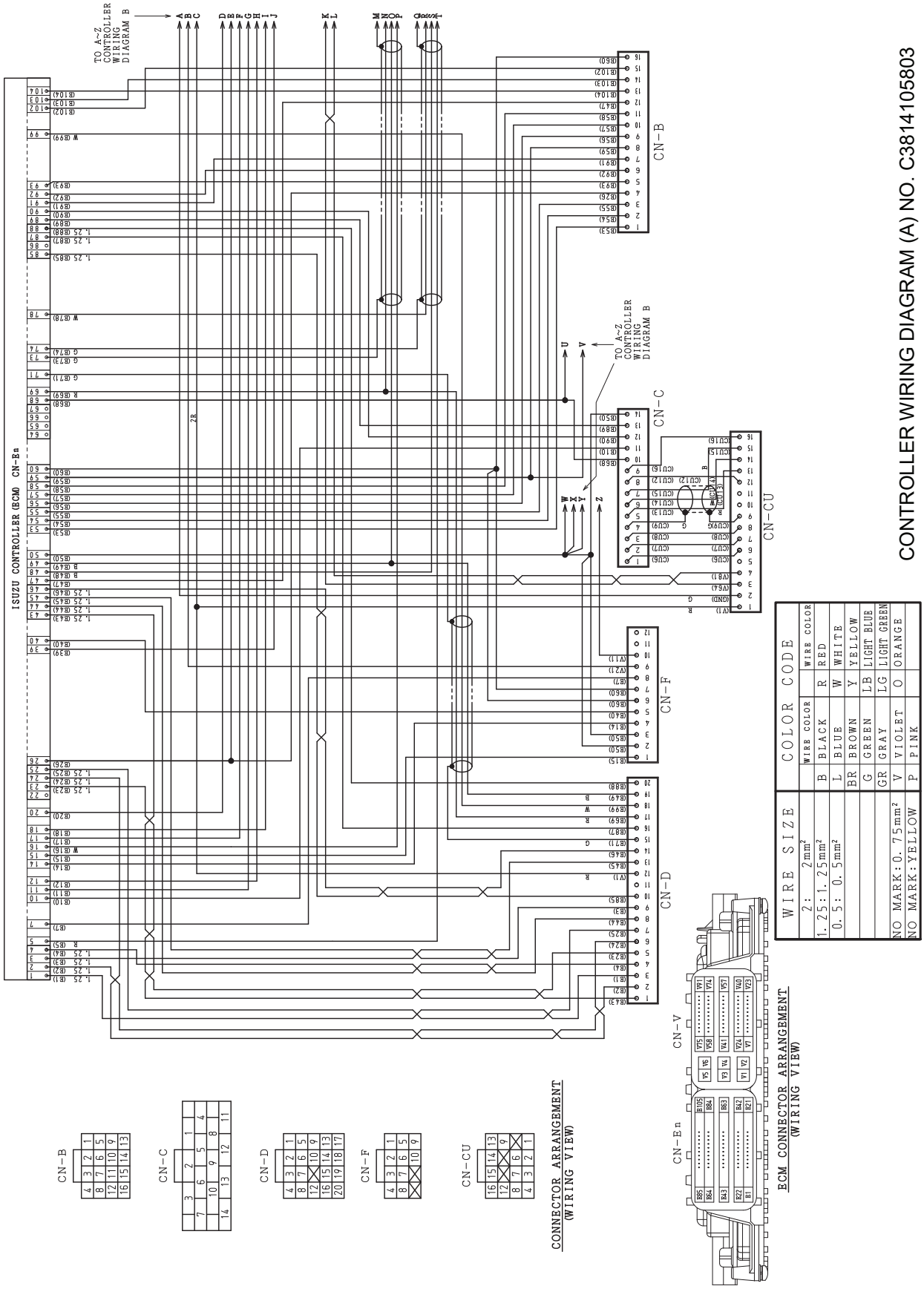
CONTROLLER WIRING DIAGRAM (A) NO. C3814105803
ISUZU CONTROLLER (ECM) CN-En
TO A~Z CONTROLLER WIRING DIAGRAM B
CN-B
CN-C
CN-CU
CN-D
CN-F
CN-V
CN-En
CONNECTOR ARRANGEMENT (WIRING VIEW)
ECM CONNECTOR ARRANGEMENT (WIRING VIEW)
WIRE SIZE
2: 2mm²
1.25:1.25mm²
0.5: 0.5mm²
NO MARK:0.75mm²
NO MARK:YELLOW
COLOR CODE
WIRE COLOR
B BLACK
L BLUE
BR BROWN
G GREEN
GR GRAY
V VIOLET
P PINK
R RED
W WHITE
Y YELLOW
LB LIGHT BLUE
LG LIGHT GREEN
O ORANGE

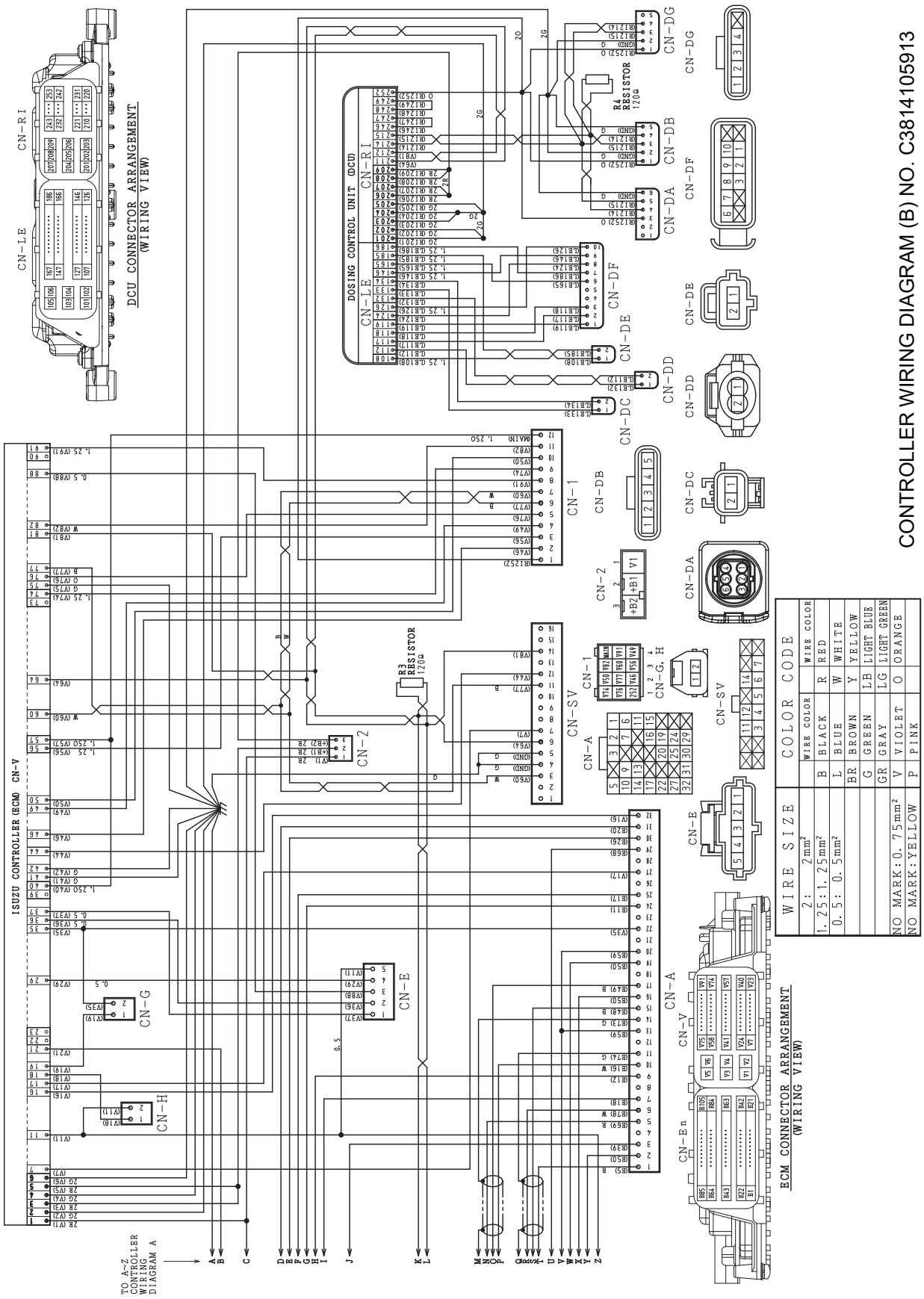
CONTROLLER WIRING DIAGRAM (B) NO. C3814105913
DCU CONNECTOR ARRANGEMENT (WIRING VIEW)
DOSING CONTROL UNIT (DCU)
ISUZU CONTROLLER (ECM) CN-V
ECM CONNECTOR ARRANGEMENT (WIRING VIEW)
TO A~Z CONTROLLER WIRING DIAGRAM A
R4 RESISTOR 120Ω
R3 RESISTOR 120Ω
CN-DG
CN-DB
CN-DA
CN-DF
CN-DE
CN-DD
CN-DC
CN-1
CN-2
CN-SV
CN-A
CN-E
CN-G
CN-H
CN-V
CN-En
CN-G, H
WIRE SIZE
2: 2mm²
1.25:1.25mm²
0.5: 0.5mm²
NO MARK: 0.75mm²
NO MARK: YELLOW
COLOR CODE
WIRE COLOR
B BLACK
L BLUE
BR BROWN
G GREEN
GR GRAY
V VIOLET
P PINK
R RED
W WHITE
Y YELLOW
LB LIGHT BLUE
LG LIGHT GREEN
O ORANGE

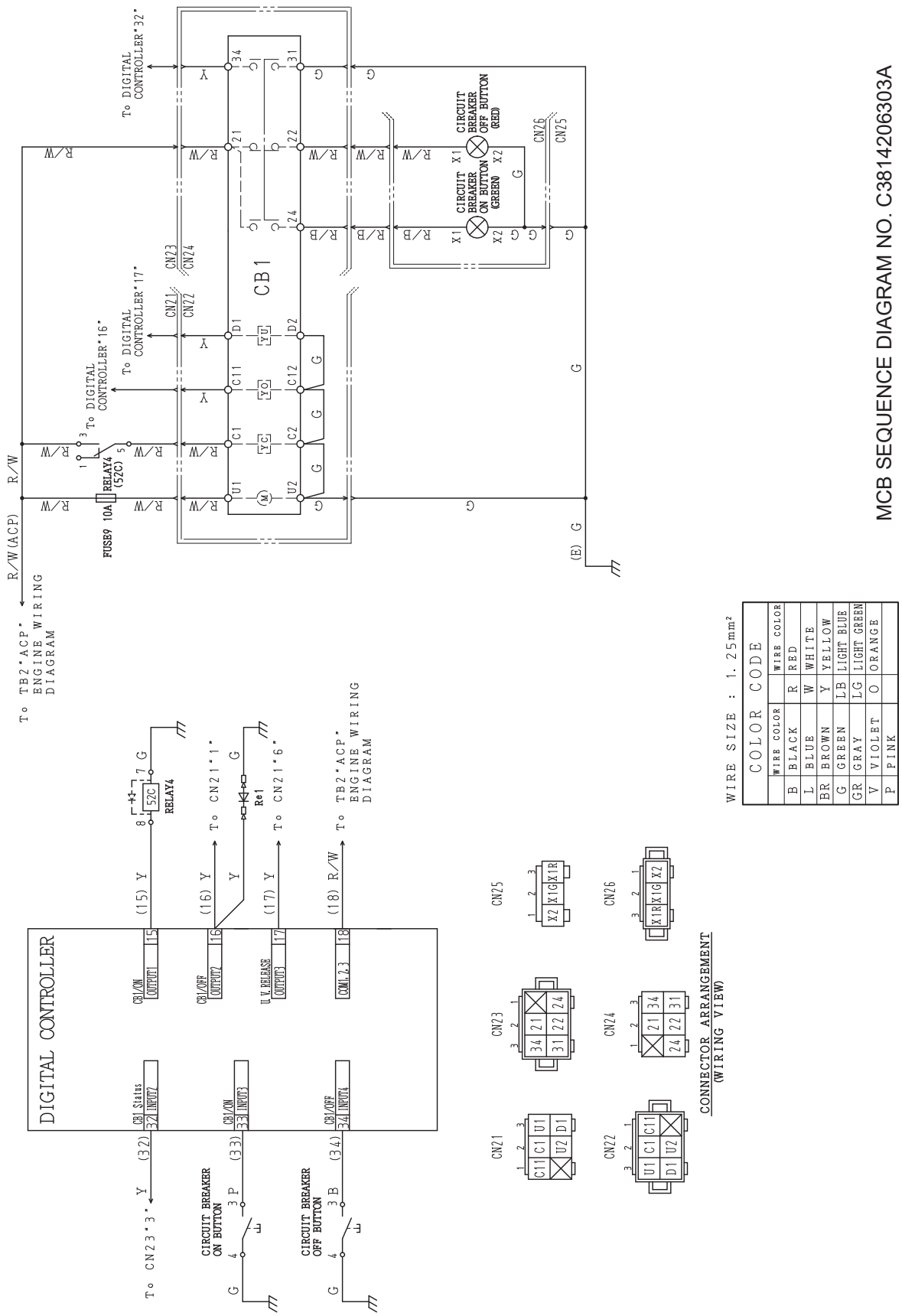
MCB SEQUENCE DIAGRAM NO. C3814206303A
DIGITAL CONTROLLER
CB1 Status
CB1/ON
CB1/OFF
UL V RELEASE
COM1,2,3
CIRCUIT BREAKER ON BUTTON
CIRCUIT BREAKER OFF BUTTON
CIRCUIT BREAKER ON BUTTON (GREEN)
CIRCUIT BREAKER OFF BUTTON (RED)
RELAY4 (52C)
FUSE9 10A
CB1
To DIGITAL CONTROLLER"32"
To DIGITAL CONTROLLER"17"
To DIGITAL CONTROLLER"16"
To TB2"ACP" ENGINE WIRING DIAGRAM
To CN23"3"
To CN21"1"
To CN21"6"
R/W(ACP)
CN21
CN22
CN23
CN24
CN25
CN26
CONNECTOR ARRANGEMENT (WIRING VIEW)
WIRE SIZE : 1.25mm²
COLOR CODE
WIRE COLOR
B BLACK
L BLUE
BR BROWN
G GREEN
GR GRAY
V VIOLET
P PINK
R RED
W WHITE
Y YELLOW
LB LIGHT BLUE
LG LIGHT GREEN
O ORANGE

BATTERY CHARGER WIRING DIAGRAM (OPTION)

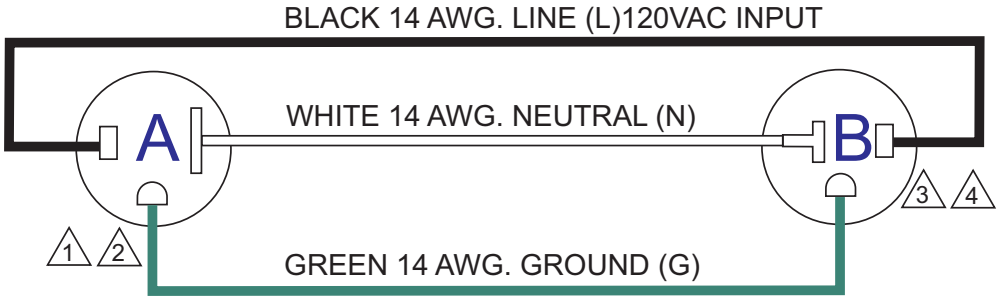

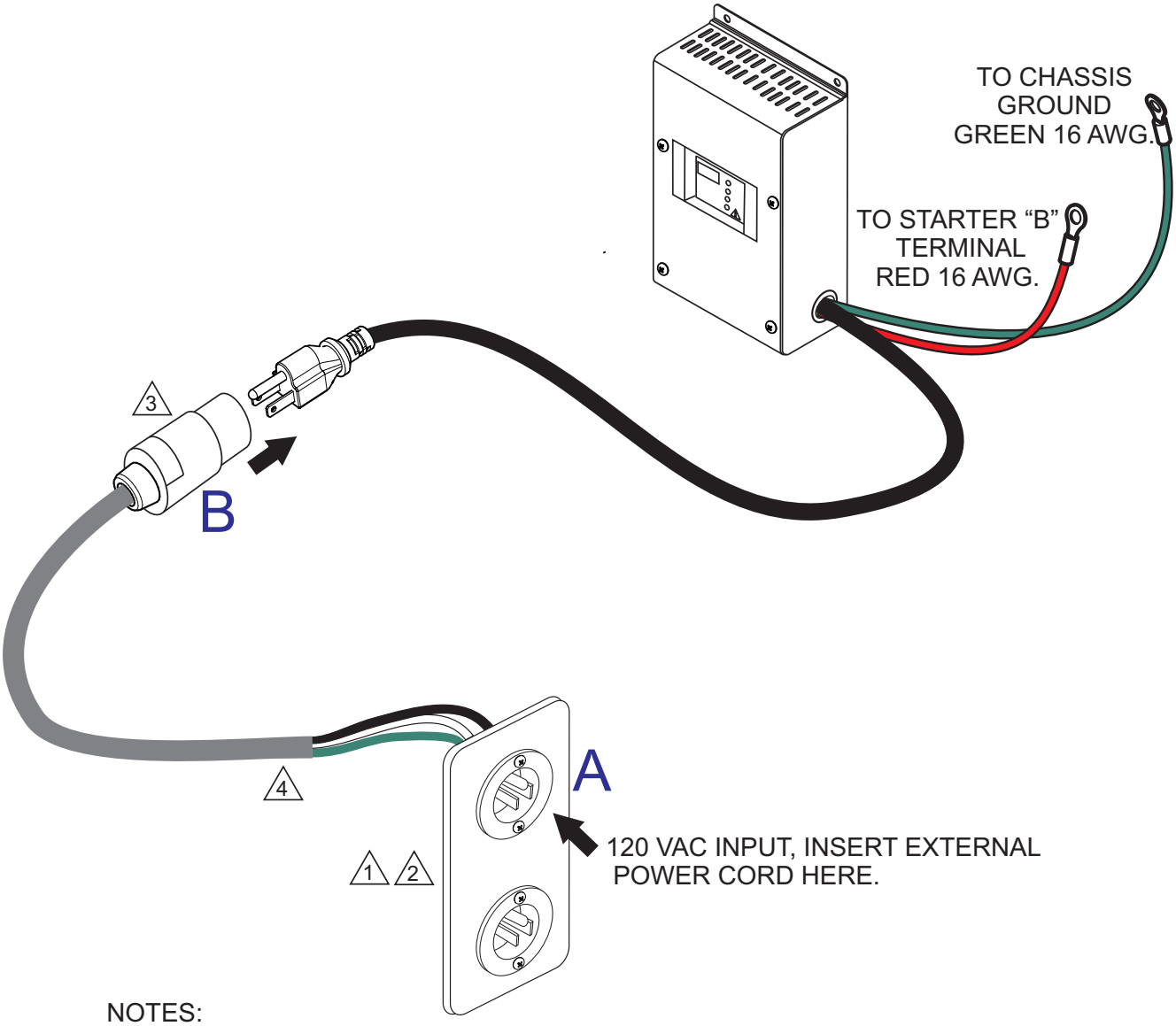

NOTES:

1. NEMA 5-15, 15A, 120 VAC, P/N EE6176 (HBL5278C/HUBBLE RECEPTACLE).
2. RECEPTACLE IS MOUNTED ON OUTPUT TERMINAL PANEL ASSY.
3. 20 AMP, 5-20R RECEPTACLE, P/N EE6131 (HBL5369C/HUBBLE RECEPTACLE).
4. CORD, CAROL 3/C 14 AWG., P/N EE56557.

ENGINE BLOCK HEATER WIRING DIAGRAM (OPTION)

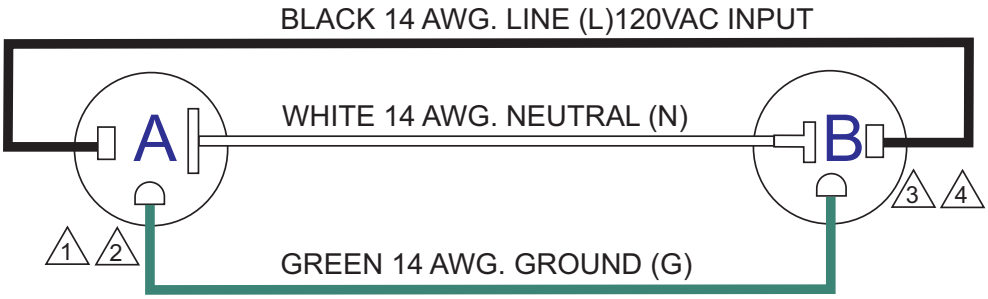

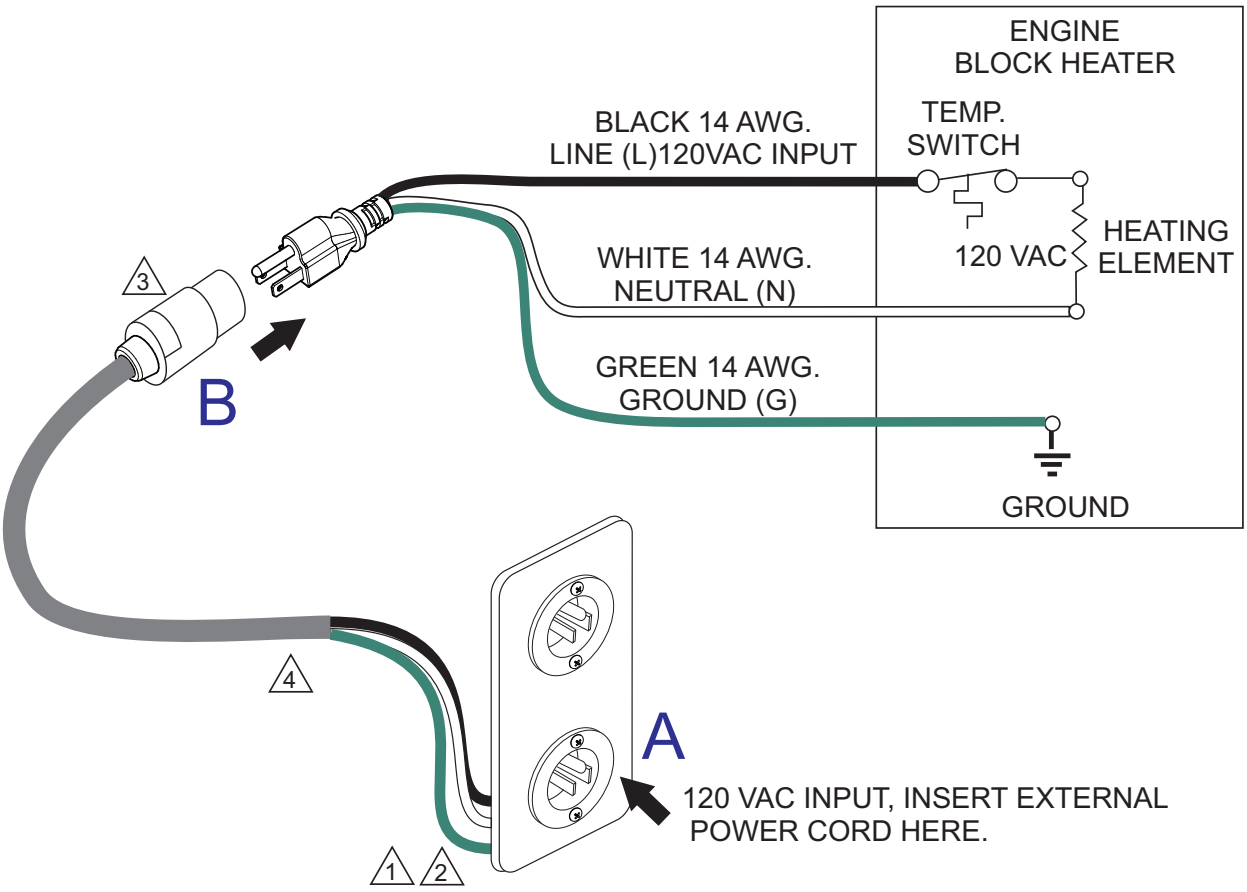

NOTES:

1. NEMA 5-15, 15A, 120 VAC, P/N EE6176 (HBL5278C/HUBBLE RECEPTACLE).
2. RECEPTACLE IS MOUNTED ON OUTPUT TERMINAL PANEL ASSY.
3. 20 AMP, 5-20R RECEPTACLE, P/N EE6131 (HBL5369C/HUBBLE RECEPTACLE).
4. CORD, CAROL 3/C 14 AWG., P/N EE56557.

OPERATION MANUAL

HERE'S HOW TO GET HELP

PLEASE HAVE THE MODEL AND SERIAL NUMBER ON HAND WHEN CALLING

UNITED STATES

Multiquip Inc.

(310) 537- 3700
6141 Katella Avenue Suite 200
Cypress, CA 90630
E-MAIL: mq@multiquip.com
WEBSITE: www.multiquip.com

CANADA

Multiquip

(450) 625-2244
4110 Industriel Boul.
Laval, Quebec, Canada H7L 6V3
E-MAIL: infocanada@multiquip.com

UNITED KINGDOM

Multiquip (UK) Limited Head Office

0161 339 2223
Unit 2, Northpoint Industrial Estate, Globe Lane,
Dukinfield, Cheshire SK16 4UJ
E-MAIL: sales@multiquip.co.uk

© COPYRIGHT 2025, MULTIQUIP INC.

Multiquip Inc., the MQ logo and the MQ Power logo are registered trademarks of Multiquip Inc. and may not be used, reproduced, or altered without written permission. All other trademarks are the property of their respective owners and used with permission.

This manual MUST accompany the equipment at all times. This manual is considered a permanent part of the equipment and should remain with the unit if resold.

The information and specifications included in this publication were in effect at the time of approval for printing. Illustrations, descriptions, references and technical data contained in this manual are for guidance only and may not be considered as binding. Multiquip Inc. reserves the right to discontinue or change specifications, design or the information published in this publication at any time without notice and without incurring any obligations.

Manufactured for
MQ Power Inc.
by
DENYO MANUFACTURING CORP.