# OUTLINE DIMENSIONS FOR SP-2000P LEVEL 2 ENCLOSURE
## (HINGED DOORS)

## TOP VIEW

(GEN-SET HAS (6) DOORS, (3) SHOWN OPEN ARE TYPICAL FOR BOTH SIDES)

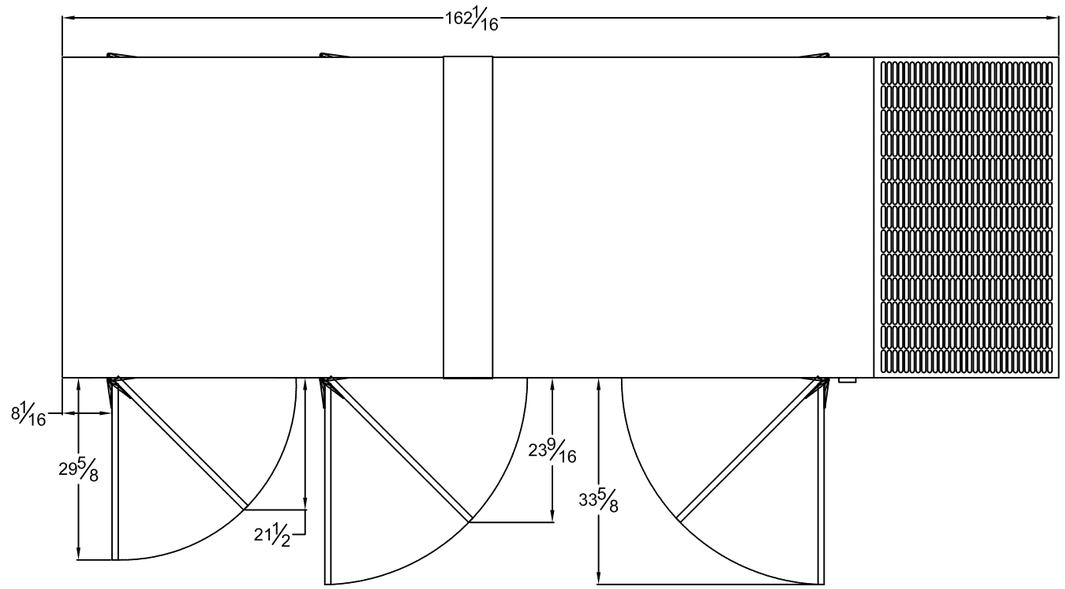


## FRAME VIEW

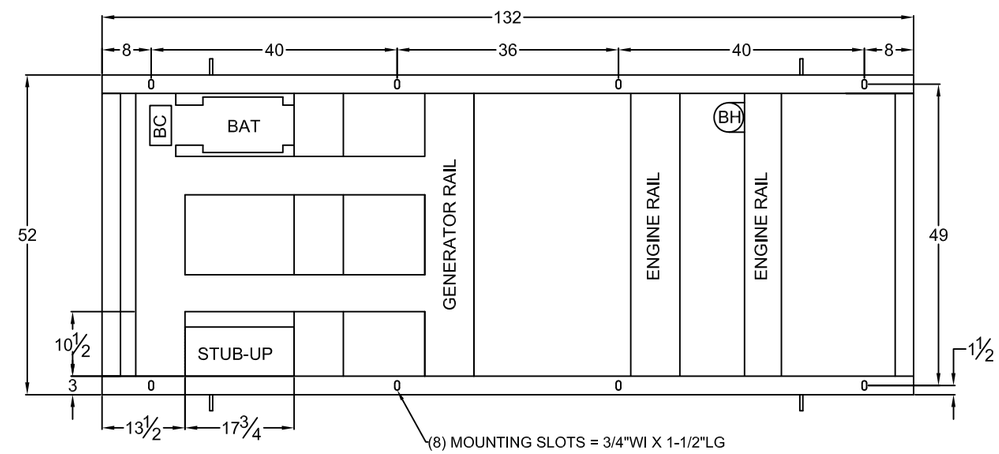


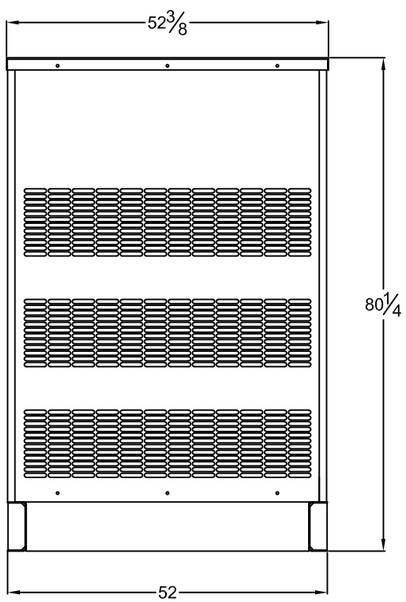


## GENERATOR END VIEW

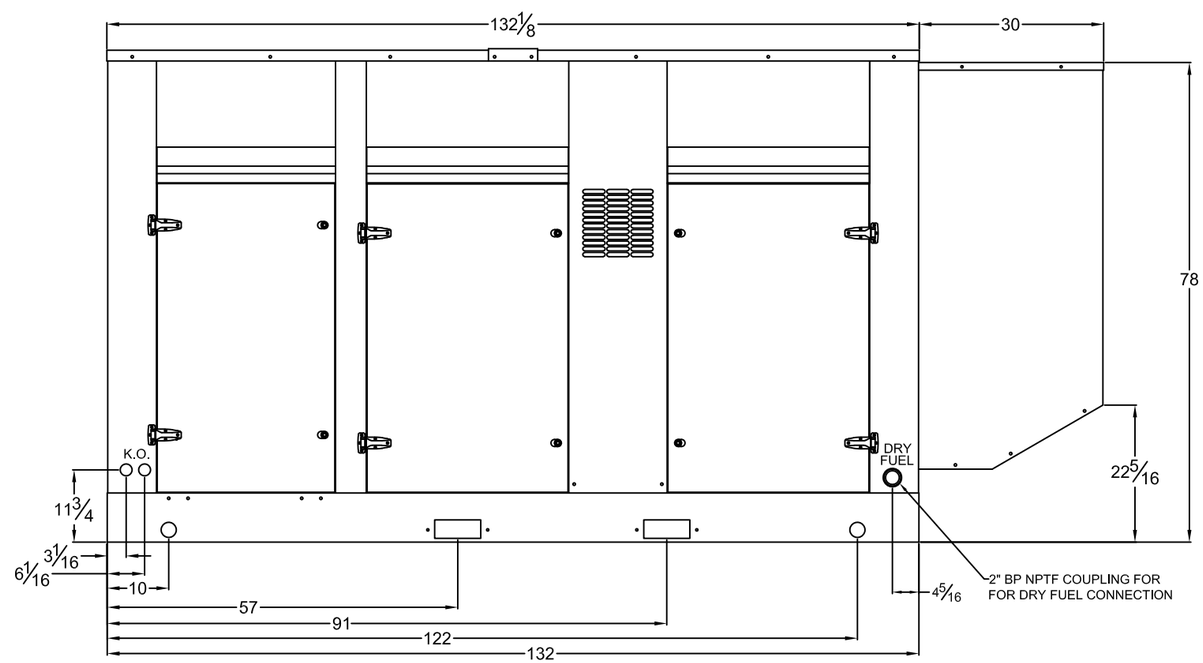


## SIDE VIEW

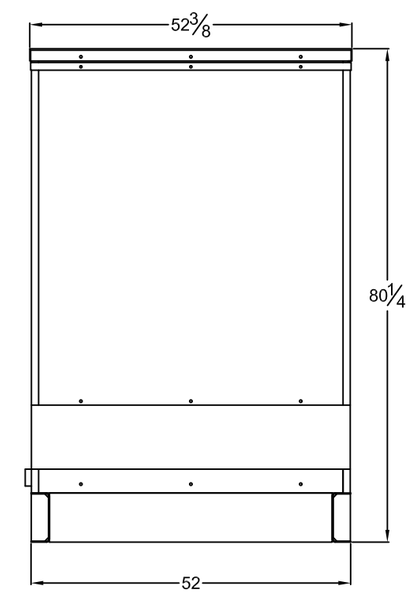


## RADIATOR END VIEW